COMPUTERISED SPEED MONITORING SYSTEM

FOR NYLON SPINNING

DISSERTATION SUBMITTED IN PART-FULFILMENT OF THE

REQUIREMENTS OF THE MASTERS DIPLOMA IN

ELECTRICAL ENGINEERING AT THE PENINSULA TECHNIKON

by

LEON GARY ABRAHAMS

NOVEMBER 1996

ABSTRACT

The Southern Nylon Spinning plant, at South African Nylon Spinners in Bellville - Cape Town - South Africa, is one of the oldest on the site and a need arose to upgrade the existing method used in speed monitoring in this particular plant. This system was unable to produce alarms on speed limits being exceeded (i.e. on under-speed or over-speed). There was no alarm logging or historical trending. Manual records on speed were either incomplete or non-existent.

Thus the purpose of this study was to investigate the existing speed monitoring system and implement a suitable computerised method of speed monitoring.

ACKNOWLEDGEMENTS

I hereby wish to thank the Director of the School of Electrical and Mechnical Engineering, Information Technology and Mathematics, and Head of Department of the Department of Electrical Engineering at the Peninsula Technikon for giving me time off and the opportunity to pursue this project.

I would also like to thank my supervisor Paul Tennant for his guidance in writing this dissertation and the contact established with South African Nylon Spinners.

A special thanks to Mr. P.K. Kulentic (Section Engineer - Process Control) and staff at South African Nylon Spinners for their co-operation and assistance in providing me with the information that I required.

Finally a special thanks to Pierre Mostert for allowing me to make use of Electrical Engineering Department's laboratory and computer facilities in the design and testing prototype circuit boards, and to my wife Ilse for her motivation and support.

I hereby acknowledge that the contents of this dissertation "Computerised Speed Monitoring System for Nylon Spinning" represents my own work and the opinions contained herein

are my own and not necessarily those of Peninsula Technikon.

TABLE OF CONTENTS

		Page no.
1.	**INTRODUCTION**	**1**
1.1	MONITORING SUBSYSTEMS	1
1.2	MACHINE SHAFT SPEED MONITORING AT SANS	3
2.	**INVESTIGATION OF EXISTING SPEED MONITORING SYSTEM**	**8**
2.1	NYLON PRODUCTION SPINNING PROCESS	9
2.2	SPEED MONITORING PROCESS	10
2.3	SHAFT SPEED DATA	14
2.4	SOUTHERN NYLON SPINNING PLANT LAYOUT	15
2.5	ELECTRONIC ENVIRONMENTAL REQUIREMENTS	16
2.6	SELECTOR SWITCH CABINET LOCATION AND DESIGN	16
3.	**ASSESSMENT OF HARDWARE**	**18**
3.1	PROGRAMMABLE LOGIC CONTROLLERS	19
3.2	ANAFLEX SPEED MONITORING SYSTEM	21
3.3	SCADA-MUX SPEED MONITORING SYSTEM	24
3.4	RLC DIGITAL PANEL METER SPEED MONITORING SYSTEM	27
3.5	STATUS DIGITAL PANEL METER SPEED MONITORING SYSTEM	30
3.6	SELECTION OF HARDWARE	32

Page no.

4. ASSESSMENT OF SOFTWARE 35

4.1 CYGNUS/AZON 35

4.2 TURBO LINK 36

4.2.1 CONTROL SCREENS 36

4.2.2 PRODUCTION REPORTING 37

4.2.3 TRENDING INFORMATION ANALYSIS 37

4.2.4 DATABASE STATUS 38

4.2.5 ALARM CLASS DEFINITION 38

4.2.6 OPERATOR MESSAGES 39

4.2.7 RECIPE MANAGEMENT 39

4.2.8 ALARMS AND EVENT LOGGING 39

4.2.9 PASSWORDS 40

4.2.10 ACCESS LEVELS 40

4.2.11 INTERFACING SOFTWARE 40

4.2.12 PROGRAMMING 41

4.2.13 MIMIC DISPLAYS 41

4.3 FIX DMACS FOR DOS 42

4.4 USER WRITTEN SOFTWARE 46

4.4.1 DISPLAY SCREENS 47

4.4.2 PASSWORDS, ALARMS AND EVENT LOGGING 48

4.4.3 ACCESS LEVELS 48

4.4.4 COMMUNICATION PROTOCOL DRIVERS 49

4.4.5 EXITING TO DOS AND TERMINATION OF PROGRAM 49

4.5 SELECTION OF SOFTWARE 52

Page no.

5. HARDWARE DESIGN 53

5.1 HARDWARE DESIGN GOALS 54

5.2 HARDWARE DESIGN OVERVIEW 54

5.2.1 MAIN CONTROL BOARD DESIGN 56

5.2.2 MULTIPLEXER INTERFACE DESIGN 59

5.2.3 DISPLAY BOARD DESIGN 61

5.3 DEVELOPMENT AND TESTING OF PROTOTYPE BOARDS 62

5.4 POWER SUPPLIES 65

5.5 WIRING AND INTERCONNECTIONS 67

5.6 THE SPEED MONITORING CABINET DESIGN 67

5.7 INSTALLATION AND COMMISSIONING 68

5.8 MANUALS AND TRAINING 69

6. CONCLUSION AND RECOMMENDATIONS 70

6.1 ASSESSMENT OF PROJECT 71

6.1.1 PRODUCTION OF ALARMS IN OVERSPEED AND UNDERSPEED 71

6.1.2 LOGGING ALARMS 71

6.1.3 PRODUCTION OF HISTORICAL TRENDS 72

6.1.4 REPORT GENERATION 73

6.1.5 COSTING 73

6.2 RECOMMENDATIONS 74

7. GLOSSARY OF TERMS 77

8. BIBLIOGRAPHY 81

Page no.

9. APPENDIX A - ORIGINAL PROPOSAL 83

10. APPENDIX B - DRAWTWISTING PROCESS 85

11. APPENDIX C - SOFTWARE SPECIFICATION 87

12. APPENDIX D - ENGINEERING MANUAL 107

13. APPENDIX E - COST BREAKDOWN 176

TABLE OF ILLUSTRATIONS

Figure no.		Page no.
2.1	NYLON SPINNING PROCESS	8
2.2	SELECTOR SWITCH PANEL	11
2.3	SELECTOR SWITCH PANEL WITH CABINET	12
2.4	EXISTING SPEED MONITORING SYSTEM	13
2.5	EXISTING SPEED MONITORING SYSTEM WITH SELECTOR SWITCH PANEL	13
3.1	ANAFLEX SPEED MONITORING SYSTEM	21
3.2	SCADA-MUX SPEED MONITORING SYSTEM	24
3.3	RLC DIGITAL PANEL METER SYSTEM	27
3.4	STATUS DIGITAL PANEL METER SYSTEM	30
4.1	FIX DMACS NETWORKING PHILOSOPHY	43
4.2	BROKEN FILAMENT DETECTION SCREEN	47
4.3	MACHINE DISPLAY SCREEN	50
4.4	RATIOS SUMMARY DISPLAY SCREEN	50
5.1	HARDWARE DESIGN OVERVIEW	55
5.2	MAIN CONTROL BOARD CIRCUIT DIAGRAM	58
5.3	MULTIPLEXER INTERFACE BOARD CIRCUIT DIAGRAM	60
5.4	DISPLAY BOARD CIRCUIT DIAGRAM	62
5.5	PHOTOGRAPH - CIRCUIT BREAD BOARDED STAGE	63

Page no.

5.6	PHOTOGRAPH - TESTING PROTOTYPE CIRCUIT BOARDS	65
5.7	CABLE INTERCONNECTIONS DIAGRAM	66
5.8	CABINET DESIGN - SIDE VIEW	68
5.9	CABINET DESIGN - FRONT VIEW	68

CHAPTER 1

INTRODUCTION

Very few industrial plants can be left to run themselves, and most need some form of control system to ensure safe and economical operation. In most cases the operator will be part of the control system. (PARR,1993:1) There are three basic types of control strategies, these are listed below:

a) Monitoring subsystems
b) Sequencing subsystems and
c) Closed loop control subsystems.

This thesis deals mainly with machine shaft speed monitoring.

1.1 Monitoring Subsystems:

These display the process state to the operator and draw attention to abnormal or fault conditions which need attention. The plant condition is measured by suitable sensors. The result of these measurements are displayed to the operator via indicators or by meters and bargraphs. These signals can also be checked for alarm conditions.

A monitoring system often keeps records of the consumption of energy and materials for accounting purposes, and produces an event/alarm log for historical maintenance analysis. (PARR,1993:1)

Over the years the monitoring of speeds, whether it be linear or rotational, has become increasingly important. In industry and especially in the process control environment, the monitoring of electric motor speeds is critical to the production environment, to the extent that it would determine the quality of various products.

Originally automatic control was envisioned primarily as a means of reducing manufacturing costs by reducing payroll expenses and increasing production rates. Increased production rates were realised, as expected; however, another reason for increased production was that there was a reduction in scrap.

Automatic control systems can be adjusted to produce end products to closer tolerances than is consistently available using human operators; therefore, improved quality of end products is frequently achieved. (HUNTER,1978:1)

In industry today, companies are always striving to commit themselves to improving the quality of products and to achieve this, certain measures have to be implemented. This

would include the logging of data, logging of alarms, generation of reports, etc which would relate to improving the quality of the product.

1.2 Machine Shaft Speed Monitoring at SANS

Many forms of speed monitoring systems currently exist in industry today. South African Nylon Spinners (SANS) currently employ inverter controllers on the 'younger' Nylon Spinning machines which make use of variable speed AC drives for control. (KIRK,1985:1)

The Southern Nylon Spinning plant, at SANS in Bellville - Cape Town - South Africa, is one of the oldest on the site and, at the beginning of the study, had a life expectancy of ±10 years maximum. This plant has 20 nylon spinning machines, with 4 different speeds being monitored on each. The methods used for monitoring these speeds had become outdated and a need arose to upgrade the technology used in speed monitoring in this particular plant. Speed in this particular plant plays a very important role in that it determines the type of yarn being produced.

These speeds were monitored on a ±8 hour basis, that is every shift changeover, and recorded manually in a register. Unexpected changes in speed between shift changeovers often went undetected. This system was unable to produce alarms on under-speed or over-speed. At this

particular plant there was no alarm logging, no historical trending and manual reports (on speed) were either incomplete or non-existent. Speeds out of tolerance range changes the yarns' specifications. Once the yarn has been spun, it is then sent to the Drawtwisting plant. For more details on the drawtwisting process refer to Appendix B. Once this process has been completed, the yarn is now ready to be dispatched to the customer.

This yarn is graded according to its process as laid down by the South Plant Product Control Parameters and Specifications Department. Each nylon spinning process has its own set of specifications. For example, for a process with batch number 44F13T333 the following speed and related data would apply:

Cross-shaft speed:	418Hz
Windup Speed:	1773Hz
Traverse Speed:	700Hz
Ratio:	4.241
Deviation:	0.021

Ratio is calculated by dividing the Windup speed by the Cross-shaft speed. The deviation from that ratio value is determined by the South Plant Product Control Parameters and Specifications Department.

The customer then purchases a specific type of yarn, which

is then woven and dyed. If an inferior type of yarn had been supplied unknowing to SANS, the dyed yarn will have uneven shades of colour appearing in it (i.e. a line of different colour in the material) which then becomes useless to the customer. This results in time and money being lost, which is in turn debited to SANS.

Incorrect setting up and monitoring of speeds is one of the major sources of wasted production. The production department conducted an investigation which revealed that ±R20 000 was lost per annum as a result of the speeds being out of its specified range in both the Nylon spinning plant and Drawtwisting plant.

Thus the purpose of this study was to implement a suitable computerised method of speed monitoring which would be able to provide the following:

a) produce alarms on over-speed or under-speed,
b) log alarms,
c) produce historical trends, and
d) generate reports.

This would provide operator staff with the ability to quickly detect speeds which are out of range and apply the necessary corrective action. The production of defective material could also be tracked back to the source of the problem.

The system had to be cost effective, and as far as possible, make use of existing technology used on the plant and be simple in design using off-the-shelf items if possible. See Appendix A for the original proposal.

The first phase of this project was a thorough investigation of speed monitoring systems, especially those existing at SANS. This included methods used in sensing the shaft speed, the instrumentation used to monitor the actual speed, the methods used for logging the data and report generation, all of which is discussed in Chapter 2.

Secondly the market place had to be thoroughly investigated for speed monitoring systems in Nylon Spinning which would suitably replace the existing speed monitoring system and possibly make use of existing hardware and software used at SANS. The hardware would be used to convert the shaft speed into an electrical signal which could then be interfaced to some form of instrumentation. This is discussed in Chapter 3.

In order to log data, generate reports, produce alarms and display data Supervisory Control and Data Acquisition (SCADA) software would be required. This software would interface directly with the instrumentation. For this reason SCADA software packages had to be investigated which would be able to perform the following functions:

- a simple method for viewing current speeds and alarm conditions,
- a facility for logging alarms historically,
- a facility for acknowledging alarms and identifying the person doing so,
- displaying historical trends,
- data logging.

The investigation and selection of software is dealt with in Chapter 4.

Chapter 5 deals with the design of the system hardware.

Chapter 6 deals with the conclusion of this project and recommendations for further study.

The Appendices contains the original proposal, drawtwisting process, software specification , costing and an engineering manual.

CHAPTER 2

INVESTIGATION OF EXISTING SPEED MONITORING SYSTEM

Part of this study required a thorough investigation of the existing speed monitoring system in the South Plant Nylon Spinning Plant at SANS.

Before any data could be collected an understanding of the Nylon Production Spinning Process was necessary. This is illustrated in Figure 2.1 (Nylon Spinning Process) and explained below.

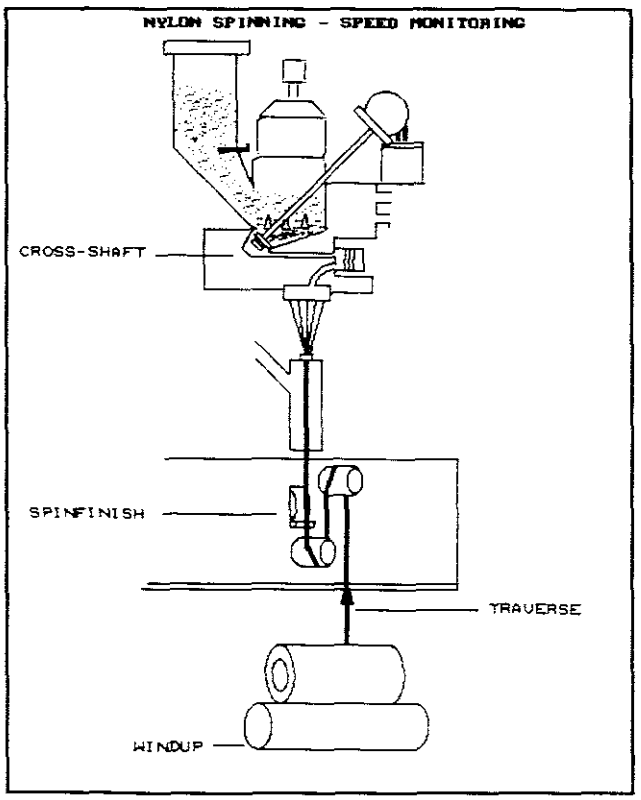

Figure 2.1

2.1 Nylon Production Spinning Process (SANS)

Polymer in chip form is the raw material from which Nylon yarn is made. The chips are charged into hoppers and gravity fed to the melter unit.

An archimedian screw inside the unit forces the chips onto a melt grid that is heated to a temperature of 290°C by a vaporised liquid known as thermex.

The molten polymer is then pumped (**Cross-shaft speed**) through the pack to filter it and extruded through a spinneret in the form of fine filaments.

These molten filaments are cooled by quench air. They then converge to form a threadline at the convergence guide which is located at the top of the conditioner tube.

The conditioner tube is filled with steam. As the yarn passes through the steam, it is softened, moistened and partially drawn to accept an oil based liquid known as spin-finish.

Spin-finish acts as an anti-static agent giving the yarn good filament cohesion. It lubricates the yarn in preparation for further processing and assists in achieving good cake builds.

The undrawn yarn is then wound (**Windup speed**) onto an identified cylinder (cardboard tube) until the desired mass is obtained (A full-doff cake). Each windup head can take up to four threadlines, which are then wound onto four cardboard tubes.

Traverse speed ensures that the undrawn yarn is woundup (spreadout) evenly on the identified cylinder.

2.2 Speed monitoring process

The Nylon Spinning plant has 20 nylon spinning machines, each having 4 different speeds, namely Cross-shaft, Windup, Traverse and Spinfinish of which only the first 3 are presently being monitored via a dual channel tachometer.

Cross-shaft and Spinfinish speeds are set up by means of adjusting the pitch of the vanes on a hydraulic variable speed gearbox. Setting up the Traverse speed is done via a variable speed pulley gearbox. Windup speed is setup via one of two gears and this cannot be adjusted once the speed has been selected.

Monitoring of speeds for Spinfinish is done by stopwatch and an operator counting the number of revolutions and is calibrated in seconds per 10 revolutions. Monitoring of

speeds for Cross-shaft, Windup and Traverse is achieved by measuring the frequency generated by variable reluctance magnetic pickup sensors mounted in the proximity of a 60 toothed gear. This gear converts the revolutions per minute (RPM) to cycles per second (Hertz). These signals (i.e. Cross-shaft, Windup and Traverse) vary in amplitude as a result of the variation in distance, as the shaft rotates, between the toothed gear and the magnetic pickup sensor.

The spinfinish speed was being monitored manually as explained above, even though the cables had been laid and a bank of 20 switches had been provided for this purpose (Figure 2.2 and 2.3). The reason for not monitoring the spinfinish speed, via a variable reluctance magnetic pickup, is that this shaft rotates at a very slow speed as indicated in Table 2.1.

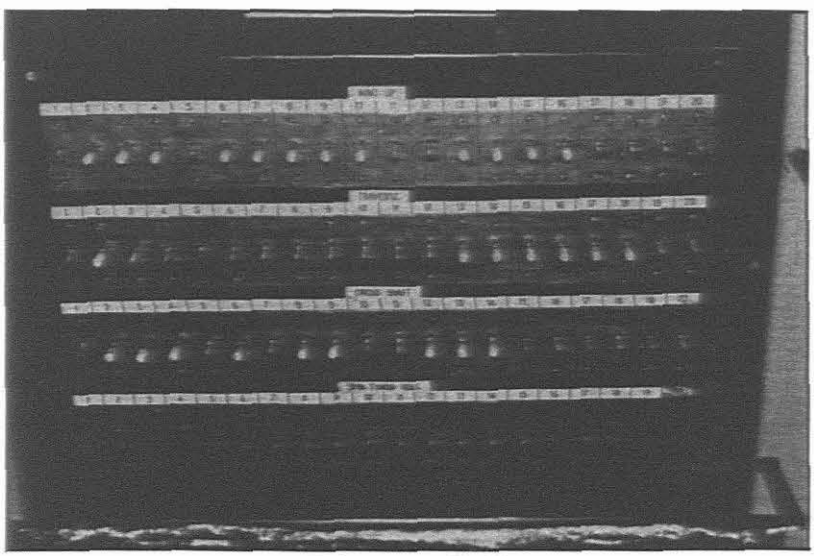

Figure 2.2

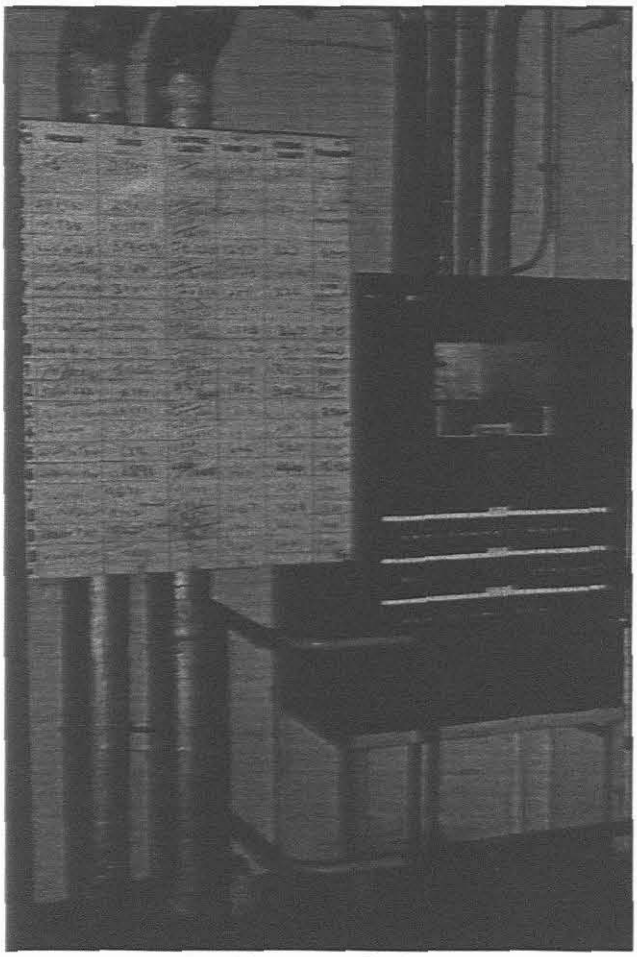

Figure 2.3

The various signals (60 off) are fed into a selector switch panel (Figure 2.4 and 2.5). (A two core screened cable was used to link the sensor to the switch panel). Once a speed is selected for a particular machine the signal is fed through an amplifier and waveshaper circuit which produces square wave pulses of the same frequency. These square wave pulses are then fed into a dual channel tachometer and the selected speed is thus displayed, which is recorded by the operator.

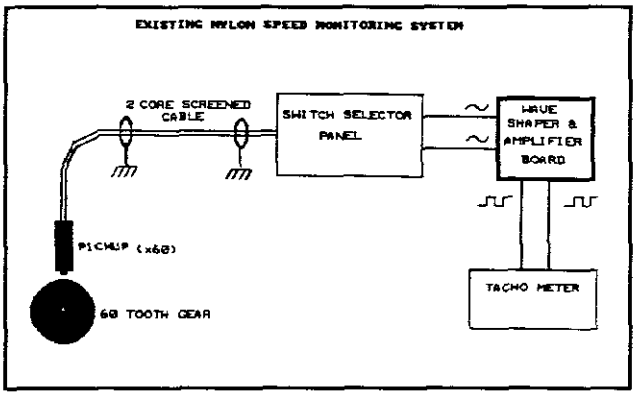

Figure 2.4 Existing speed monitoring system

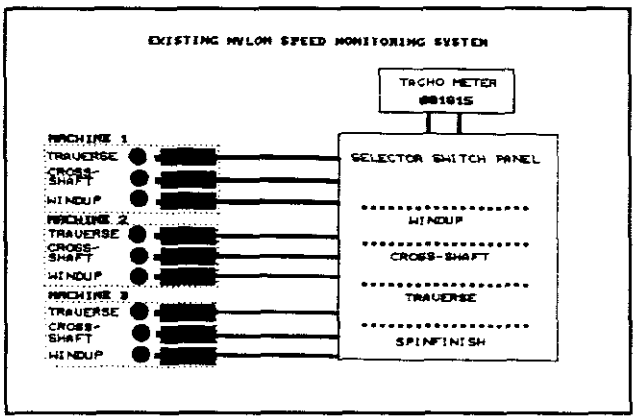

Figure 2.5 Existing speed monitoring system with selector switch panel

Every switch on the panel is a double-pole double-throw switch which makes it possible to allow cross-shaft and windup speeds to be selected simultaneously, so that the ratio can be displayed on the tachometer. On the tachometer itself is a range of switches which would allow the operator to measure the ratio's. It is of utmost importance that Cross-shaft and Windup ratio's remain constant since this determines the yarns thickness.

Each machine is capable of producing all the various types of yarn required by other industries. Once a particular machine had completed the production of a specific type of yarn it could easily be 'changed over' (often referred to as a Machine Change Over or MCO) to produce a different type of yarn (i.e. a new set of speed ranges are applied).

2.3 Shaft Speed Data

The following data was obtained from SANS site staff, reflecting the following:

- tolerance/resolution of each speed being monitored.

- range of each speed being monitored for the various Nylon spinning productions.

SPEED	**RANGE**	**TOLERANCE**	**RESOLUTION REQUIRED**
CROSS-SHAFT	155Hz - 560Hz	±1Hz	1Hz
TRAVERSE	130Hz - 700Hz	±1Hz	1Hz
WINDUP	309Hz - 1815Hz	±1Hz	1Hz
SPINFINISH	0.0645Hz - 1.25Hz OR (155sec/10rev - 8sec/10rev)	±0.0004Hz	0.0004Hz OR (1s/10rev)

Table 2.1

The input signal range and amplitude was measured using a storage oscilloscope over a period of 2 days, randomly analyzing the input signals. This was achieved by connecting the storage oscilloscope directly on the variable reluctance magnetic pickup. The results are indicated below. A selection was made for high, low, and mid-range frequencies for Cross-shaft, Windup and Traverse.

Input Signal Range: 0.5 Volts peak-to-peak to 40 Volts peak-to-peak (Sinewave).

Traverse Speed (frequency) modulates over a period of 40 to 90 seconds depending on the process being run. The Traverse speed modulates to avoid banding and ribboning during cake builds.

2.4 Southern Nylon Spinning Plant layout

The 20 Nylon spinning machines took up a total area (floor space) of approximately 63m x 14m = 882m^2. These machines are placed back to back so that ten rows existed and the headstock of each machine being at either end of each row. Each machine is approximately four storeys high with the Cross-shaft speed sensors being located on the first floor. The Traverse and Windup shaft speed sensors are located at the headstock of each machine on the ground floor. The monitoring of the slow Spinfinish speed is also done on the ground floor.

2.5 Electronic environmental requirements

For the speed monitoring system to function effectively it had to be able to operate within the following environmental conditions:

2.5.1 temperature range: 0-45°C,

2.5.2 humidity: 90% non condensing,

2.5.3 atmospheric corrosion: mildly reducing,

2.5.4 mains supply voltage: 220Vac 50Hz.

The system would also have to tolerate the large amounts of electrical noise generated on the mains supplies. (KIRK,1985:D-2)

2.6 Selector switch cabinet location and design

The existing selector switch panel was located centrally on the ground floor.

Other areas within the Nylon spinning plant were considered for the installation of the new cabinet but the cost implications of doing this proved to be too expensive since this would result in the re-routing of all sensor cables. Thus the equipment had to be located in the existing selector switch panel position. Computer and instrumentation equipment had to housed in an enclosure which did not exceed the following specifications: 1800mm

high X 600mm wide X 600mm deep. The reasons for these limitations were floor height, process piping and existing electrical switchgear.

The enclosure had to be bolted to the floor to withstand vibrations and accidental movement. A buggie barrier had to be installed to protect the enclosure against accidental damage. This enclosure had to conform to the IP55 protection code and make use of forced ventilation to prevent heat build-up. The operator keyboard or other user interface had to be accessible to the operators without having to open the cabinet. The enclosure had to be designed in such a manner as to allow easy access for the maintenance crews.

Once all the information regarding the speed monitoring process, speed range, tolerance, resolution, signal range, plant layout and cable runs had been noted, it was now possible to investigate the necessary hardware and software systems which could be used to replace the existing speed monitoring system.

CHAPTER 3

ASSESSMENT OF HARDWARE

A wide range of commercially available hardware products could be used to build the new speed monitoring system but in providing a solution one had to consider the following criteria (See Appendix A):

a) the cost of a computerised method of speed monitoring,
b) whether the equipment to be used in providing a solution was already in use in other sections of the plant,
c) make use of off-the-shelf (standard) items if possible,
d) the system had to cater for the various speed ranges tabled in Chapter 2 (Table 2.1),
e) the design of the new system had to be modular in approach,
f) the time required to scan the four different speeds on all 20 machines (i.e. the scan time),
g) expansion capabilities,
h) whether the shaft speed and ratios' data was readily available for all 20 machines, (i.e. the availability of information),
i) limit the replacement of the existing speed sensors.

Past records have shown that SANS insist on purchasing electronic equipment from reliable sources for reasons of reliability and backup service. In-house design and construction is only justified when there is no commercially available system to perform the task as specified or the savings resulting from an in-house design are considerable.

The proposed system had to be modular to ensure ease of maintenance and improve reliability. Standardisation was also essential for ease and speed of development, installation, commissioning and maintenance.

The following hardware solutions were considered:

3.1 Programmable Logic Controllers (PLC's)

Prior to 1968, control functions were performed by control relays. Control relays were effective, but they had some serious drawbacks and in 1968 the Hydramatic Division of General Motors Corporation specified design criteria for a programmable logic controller (PLC) to replace the relay-control system. (BATTEN,1988:1.4) As time progressed developments in microprocessor technology translated into more flexible and powerful PLC's.

Essentially a PLC is a digital electronic device that meets the following three criteria:

3.1.1 it has programmable memory, in which instructions can be stored,

3.1.2 the instructions stored in the memory are used to implement various functions, such as logic, sequencing, timing, counting and arithmetical functions,

3.1.3 the various functions are then used to control or monitor machines and processes.

Various types of PLC's are currently being used at SANS to control and monitor certain sections of the plant. PLC's could be used successfully to monitor the speed in the nylon spinning plant but the cost of a Siemens PLC alone would be ±R50 000. This figure excludes the front end signal conditioning and the PC required to manipulate and display the data from the machines.

This installation would only have been justified if the PLC was required to control the motor speeds as well as monitor the shaft speeds. For the reasons explained above this method of speed monitoring was abandoned since this installation would prove to be too expensive and sophisticated for this application.

3.2 Anaflex speed monitoring system

For an overview of this system please refer to Figure 3.1. The Anaflex system consists of a Serial Bus Controller Eurocard (SBCC) with an integral Conet Local Area Interface, RS232 communications also being available. This provides a link between an Anaflex system and any other device or node on the network. This microprocessor-based card, the SBCC, can control up to 13 Anaflex Serial Bus Input/Output (I/O) cards (SBIO). The total number of field I/O that could be addressed depended on the SBIO cards being supervised. For example up to 208 analog inputs could be addressed from 1 SBCC card using 13 x 16 Channel Analog to Digital (A/D) SBIO cards.

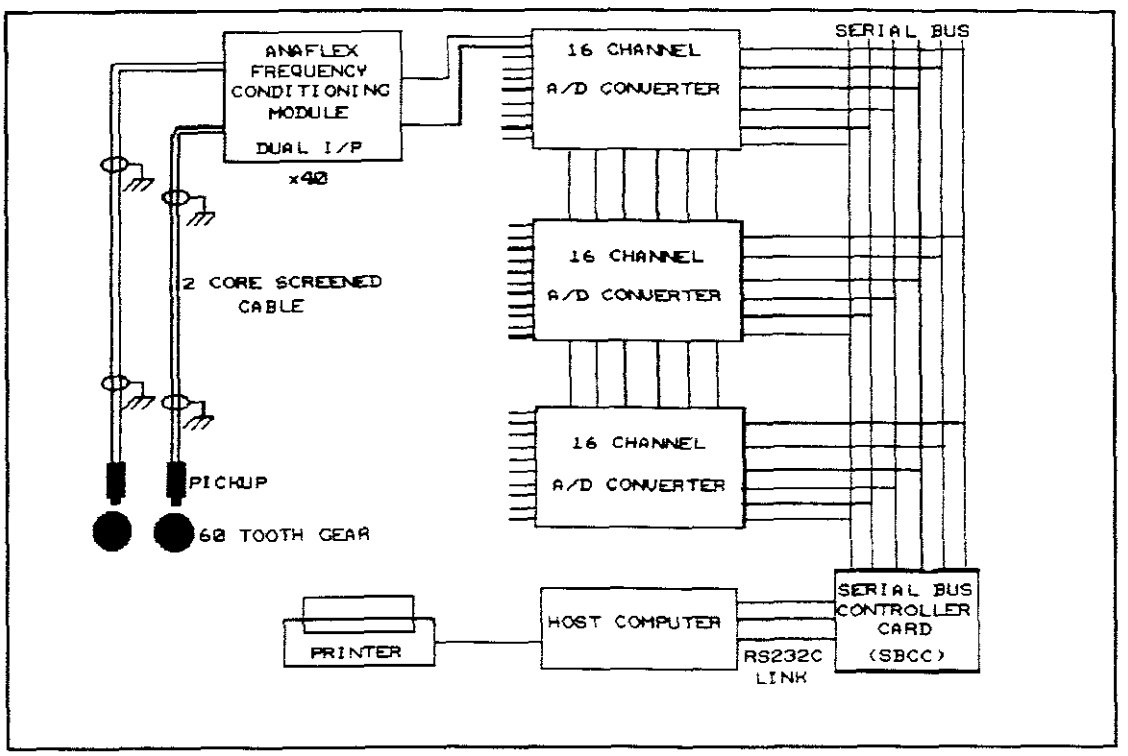

Figure 3.1

For this installation 40 Anaflex dual input Eurocards would be required, to cater for the 80 inputs from the field, and three 16-Channel A/D converters for multiplexing to a Serial bus controller card (SBCC). Each dual input Eurocard transmits two separate 0-10 Volt signals which could be accepted by the 16 Channel A/D converters. The three 16 channel analog to digital cards are then connected via a serial bus to the SBCC. From the SBCC, information could then be transmitted to the computer via RS232 communications.

Each dual input eurocard has two separate circuits for signal conditioning, namely the standard Anaflex Plug-on Input Conditioner Modules. A wide range of input conditioner modules are available but frequency conditioner modules would be required for this project since these modules could accept low voltage analogue frequencies generated by a variable reluctance magnetic pickup. Each module could only monitor a specific input signal range. Since each machine could run any process, it was important that each module could handle the specific frequency range required. The frequency ranges that were to be selected are indicated on the following page (this would cater for all the various Nylon spinning processors).

Range: Cross-shaft & Traverse 100-800Hz

Windup 300-1900Hz

Spinfinish 0-50Hz

Accuracy: 0.2% - Manufacturer's specifications

To monitor the slow spinfinish speed Namur sensors would have to be installed together with the cabling and wiring.

Frequency ranges for each module would have to be factory set, calibrated & tested prior to commissioning. This would also result in 3 different types of Anaflex frequency input conditioning modules to be kept as spare for maintenance purposes, increasing the running costs of this system.

In addition to the above the display of information would be entirely dependent on the computer and in the event of a computer malfunction no information would be available to the operators.

All the existing cabling would be used and the only additional cabling that was required would be from the Namur sensor to the headstock of each machine. Twenty Namur sensors would have to be installed, one on each machine.

Minimum scan time for all 80 inputs would be ± 2secs, this time being configurable via the software that was to be used.

A cost breakdown for the installation of this system is given in Appendix E and this was required by SANS (see Appendix A).

3.3 SCADA-MULTIPLEXOR speed monitoring system

For an overview of the SCADA-MUXTIPLEXOR speed monitoring system please refer to Figure 3.2. The development of this system would require the use of different types of speed monitoring modules to accommodate all the speed ranges. A Red Lion Controls (RLC) digital panel meter would be used to monitor the slow spinfinish speed (0.0625Hz - 1.25Hz). This particular panel meter was fully programable with a 6 digit display and employed a current loop communications processor (4 - 20mA output), it could also monitor speeds as slow as 0.01Hz (RLC instruments catalogue:SANS).

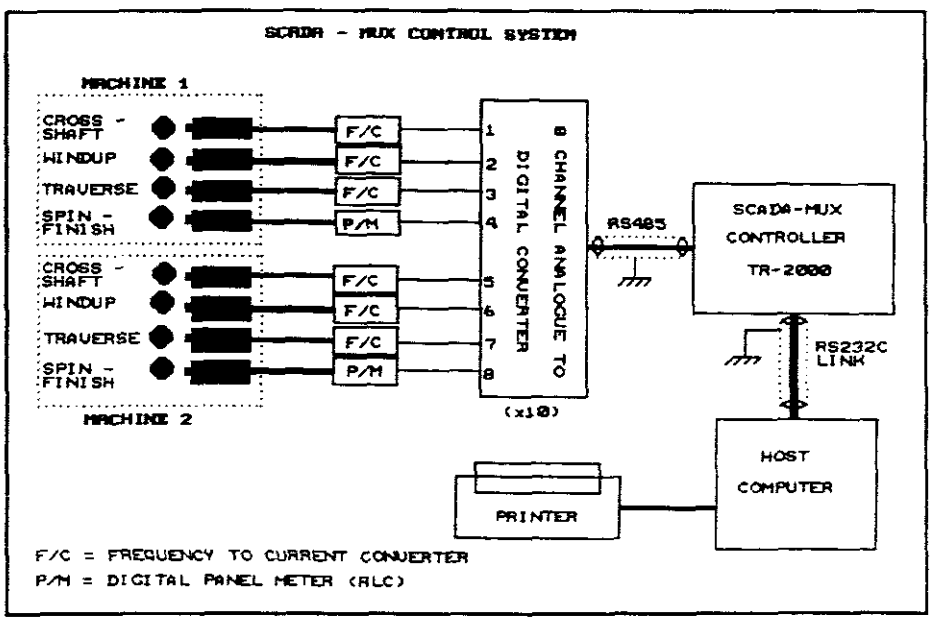

Figure 3.2

The Windup, Cross-shaft and Traverse speeds would be monitored via Rhomberg signal conditioning units (SC320 tachometer relay units).

The Rhomberg signal conditioning units (frequency to current converters) would have to be customised since these normally employed voltage free output contacts. These outputs would have to be converted to produce a 4 - 20mA current loop communications output. This would result in non-standard units, thus adding to the complexity and cost of replacement modules. In addition to the above the display of information is again entirely dependent on the computer, except for the slow spinfinish speed, and in the event of a computer malfunction no information would be available to the operators. Minimum scan time for all 80 inputs would be ± 2secs.

These Rhomberg signal conditioning units have a set range of frequencies and for this reason a physical range selection (out of 2) may have to be made during an MCO. The accuracy and speed ranges are as indicated below:

Accuracy: 0.4% for Spinfinish
5.39% for Cross-shaft, Traverse & Windup

Range: (1) 100-1000Hz
(2) 1000-1900Hz
(3) 0.01-2Hz (to be monitored by RLC digital panel meter.)

This further results in the system being unable to display frequency values lower than 100Hz and 1000Hz on ranges 1 & 2 respectively.

The frequency to current converters and RLC digital panel meters would be connected to an 8 channel analogue to digital converter and then via RS485 communications to a SCADA-MUX controller (TR - 2000). Ten A/D converters would be required for all 80 input signals. The TR-2000 in turn would be linked to the host computer via RS232C communications. The Rhomberg signal conditioning units, RLC panel meters and the 8 channel analogue to digital converter would be mounted in an enclosure at the headstock of every 2nd machine, since every two machines are connected back-to-back.

Twenty Namur sensors would have to be installed on each machine. All sensor cabling would have to be re-routed to the headstock of every second machine. RS485 cabling would have to be installed and routed to the SCADA-MUX controller which would be positioned at the existing selector/tachometer switch panel. The SCADA-MUX controller would then be linked to the computer via a RS232C communications cable. The SCADA-MUX controller and computer would be housed in one enclosure. A cost breakdown for the installation of this system is given in Appendix E.

3.4 RLC Digital Panel Meter speed monitoring system

The digital panel meter had an input frequency range from 0.01Hz to 50kHz with a programable time range 0.2 - 100secs. A five digit display was also available. No external signal conditioning was necessary since the digital panel meter was designed to except an input signal amplitude range from 0.3 Volts peak-to-peak to 50 Volts peak-to-peak (RLC catalogue: SANS). For an overview of this system please refer to Figure 3.3.

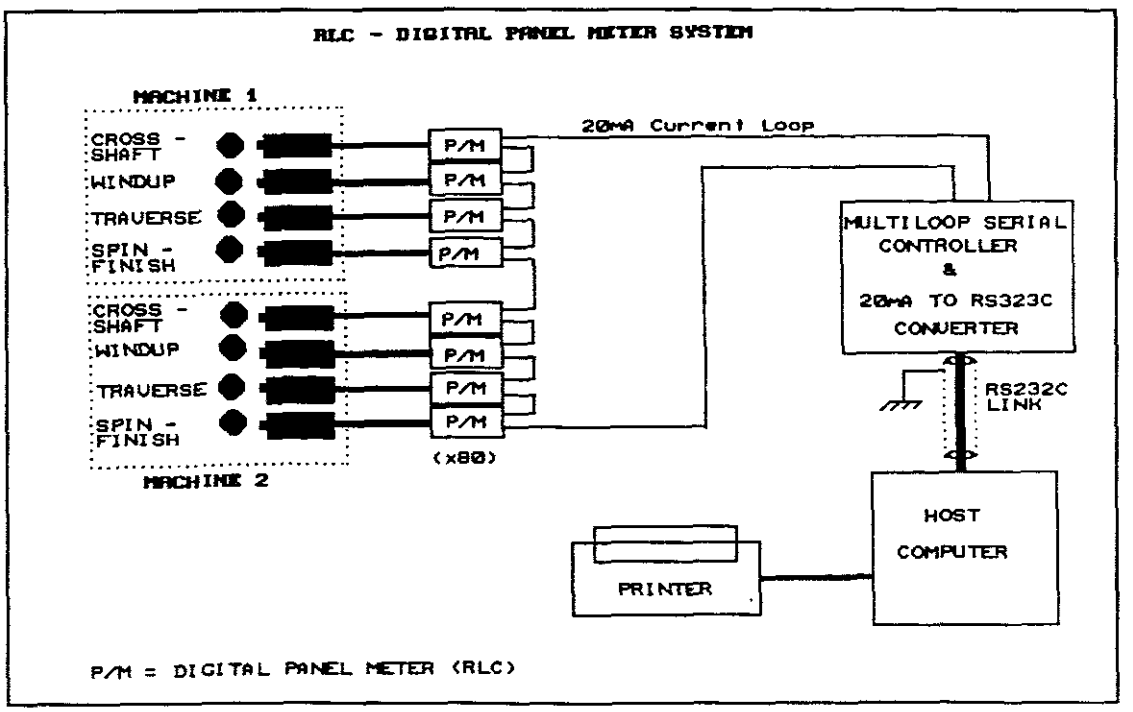

Figure 3.3

Once the range has been configured on the RLC digital panel meter prior to commissioning, no further adjustments would be required, even during MCO's. Since this panel meter was fully programable any speed range between 0.01Hz and 50kHz could be programmed. The accuracy and speed ranges that would be programmed are indicated below:

Accuracy:	0.01% ±1 digit on all ranges (RLC catalogue: SANS).	
Range:	Cross-shaft & Traverse	0.01-800Hz
	Windup	0.01-1900Hz
	Spinfinish	0.01-2Hz

This system could run independently of the host computer since the speed could easily be read off the panel meters. Four panel meters would be installed at the headstock of each machine. The individual panel meters are then multiplexed onto a 20mA current loop via a Multi-loop Serial Communications Controller (20mA Current Loop provides excellent noise immunity). The Multi-loop Serial Communications Controller then transmits data to the host computer via a 20mA current loop to RS232C converter. This information is then processed for computation, display and report generation.

In addition to the above the panel meter could also provide the following:

Scan rate: Typical 400mSec per input.
Total Scan Time for 80 inputs = 32secs minimum.
Local alarms option available.
Expandable up to 384 units.

Twenty Namur sensors would have to be installed on each machine.

All sensor cabling would have to be re-routed to the headstock of every machine. Two-wire screened cabling would have to be installed and routed to the multi-loop serial controller which would be positioned, together with the computer, at the existing selector/tachometer switch panel. Each loop on the multi-loop serial controller could only handle 8 inputs, this would mean that a total of 10 loops would be required to handle the 80 input signals. The multi-loop serial controller would be linked via RS232C communications to the host computer.

A cost breakdown for the installation of this system is given in Appendix E.

3.5 Status Digital Panel Meter speed monitoring system

The status panel meter has an input frequency range 0.03Hz to 20kHz with programable time range. Five digit display was also available. No external signal conditioning would be required and this system could run independently of the host computer. For an overview of this system please refer to Figure 3.4.

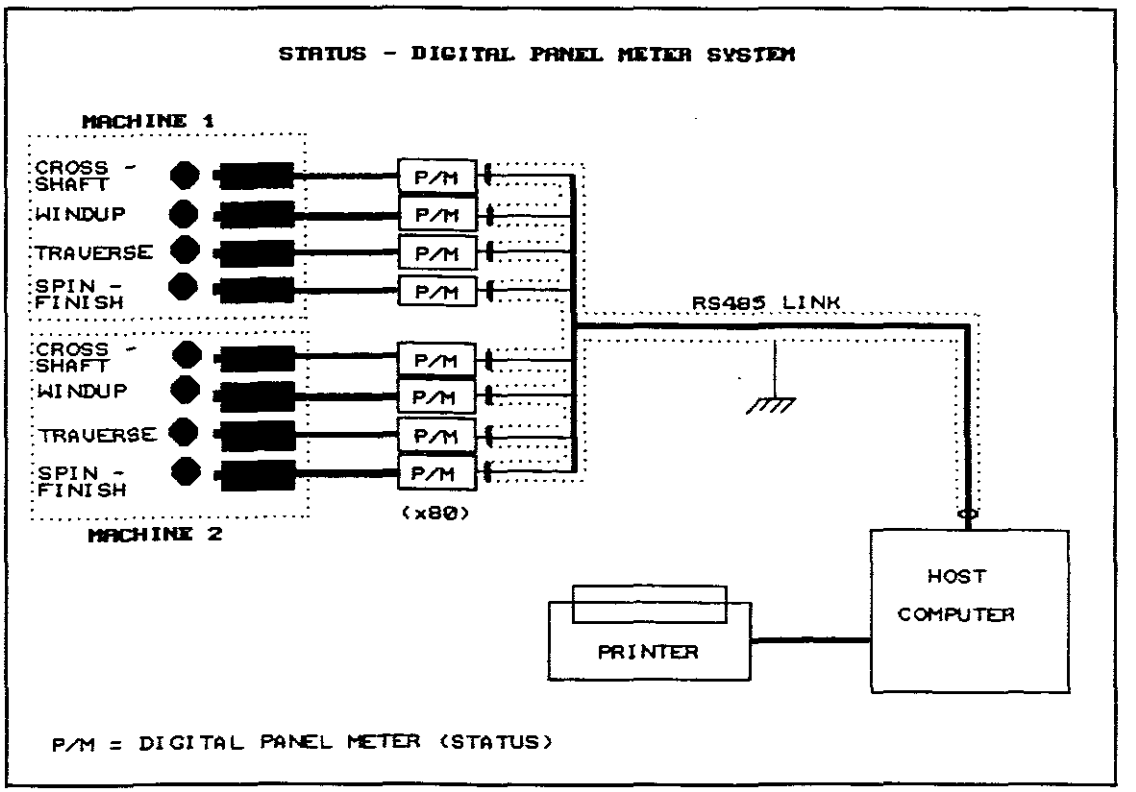

Figure 3.4

Once the range has been configured prior to commissioning, no further adjustments would be required, even during MCO's. Accuracy and range selected are indicated below:

Accuracy 0.01% displayed up to 5 significant figures (DM4000 Instruments and application notes; July 1991: SANS).

Range:	Cross-shaft & Traverse	0.03-800Hz
	Windup	0.03-1900Hz
	Spinfinish	0.03-2Hz

In addition to the above the panel meter could also provide the following:

Communications: RS485 Multidrop.
Scan rate: Typical 500mSec per input.
Total Scan Time for 80 inputs = ± 10secs minimum.
Local alarms option available.
Expandable up to 99 units.

Four panel meters would be installed at the headstock of each machine and twenty Namur sensors would have to be installed on each machine to monitor the spinfinish speed. All sensor cabling would have to be re-routed to the headstock of every machine. Two-wire screened cabling would have to be installed and routed to each panel meter and then to the computer which would be positioned at the

existing selector/tachometer switch panel. Enclosures would have to be installed for the panel meters to be mounted at the headstock of each machine.

This system would operate virtually the same as the RLC Digital Panel Meter option except that it had an RS485 communications module which would simplify the cabling structure. A cost breakdown for the installation of this system is given in Appendix E.

In reviewing the options 3.1, 3.2, 3.3, 3.4 and 3.5 listed above, each of these systems would have been able to perform the task equally well, with some systems having slight advantages over the other. Please refer to Table 3.1 for an overview of how well each system compared to each other.

3.6 Selection of Hardware

Options 3.2, 3.3, 3.4 and 3.5 listed above together with a cost breakdown were presented to the Production Management Department of SANS. As stated earlier in the introduction of this document SANS lost ±R20 000 per annum as a result of speeds being out of its specified range, this would mean that if this project was to save the company some money it would have to pay for itself within the company's two year payback period for projects of this nature.

ANAFLEX	SCADA - MUX	RLC - DIGITAL PANEL METER	STATUS - DIGITAL PANEL METER
System dependent on host computer for display of various speeds	System dependent on host computer for display of various speeds	System can run independently of the host computer. The various speeds will be displayed at the headstock of each machine.	System can run independently of the host computer. The various speeds will be displayed at the headstock of each machine.
Signal conditioning required. Frequency to frequency converter.	Signal conditioning required. Frequency to frequency converter.	No signal conditioning required.	No signal conditioning required.
Frequency to frequency converters will have to be built and tested, adding to the complexity and cost of replacement modules.	Conditioning units will have to be customized, resulting in non standard units and thus adding to the complexity and cost of replacement units	Already proven off the shelf item.	Already proven off the shelf item.
Once the range has been configured no further adjustments would be required even during an MCO.	A physical range selection will have to be made to the signal conditioning module during an MCO.	Once the range has been configured prior to commissioning, no further adjustment's will be required, even during MCO's.	Once the range has been configured prior to commissioning, no further adjustment's will be required, even during MCO's.
Range: 0-50Hz, 100-800Hz,300-1900Hz Accuracy: 0.2%	Range: 0.01-5Hz, 100-1000hz, 1000-1900Hz. Accuracy:Counter modules 0.01-5Hz 0.01% 100-1000Hz 5% 1000-1900Hz 5% analogue i/p module 0.39%	Range: 0.01-2Hz, 0.01-800Hz 0.01-1900Hz Accuracy: 0.01% ±1 digit on all ranges.	Range: 0.03-2Hz, 0.03-800Hz 0.03-1900Hz Accuracy: 0.01% ±1 digit on all ranges.
	Different types of speed monitoring modules will have to be used to accommodate all the speed ranges.		
Total Scan Time: ±2secs	Total scan time: ±2secs	Total scan time: ±32secs	Total scan time: ±2secs
Communications: Bus structure	Communications: RS485 multidrop	Communications: 20mA current loop	Communications: RS485 multidrop
Plant shutdown required.	System can be phased over.	System can be phased over.	System can be phased over.
Total cost: ±R196 350	Total cost: ±R152 900	Total cost: ±R199 100	Total cost: ±R225 000

Table 3.1

Looking at the cost breakdown given in Appendix E, the Production Management Department decided that any options listed above were too expensive to consider.

Past records have shown that SANS insist on purchasing electronic equipment from reliable sources for reasons of reliability and backup service. In-house design and construction is only justified when there is no commercially available system to perform the task as specified or the savings resulting from an in-house design are considerable (Kirk,1985:1).

For the reasons mentioned above a hardware system had to be designed and developed at a much lower cost even if it meant sacrificing the monitoring of the slow spinfinish speed. The development and design of this new hardware system is explained in Chapter 5.

CHAPTER 4

ASSESSMENT OF SOFTWARE

There are a wide range of commercially available software products which could be used as a monitoring system, but once again one had to consider the following criteria in providing a solution (refer to Appendix A):

a) the cost of commercially available software products,
b) whether the software was already in use on other sections of the plant,
c) whether the software package could provide a simple method for viewing current speeds and alarm conditions, log alarms historically, display historical trends and whether data could be accessed remotely via a network or serial link,
d) interfacing to required monitoring hardware.

Below is a list of the best possible front end control systems which could be used to implement a solution under the given conditions:

4.1 CYGNUS/AZON

This software is currently being used to control various

sections of the plant at SANS. However it requires a VAX platform running under the Open-VMS operating system. The package caters for medium to large size plants (5000 - 26000 inputs and outputs). Thus the base cost of such a system is prohibitive for the size of the system under consideration.

4.2 Turbo Link

At the time of this project this software was not being used at SANS but SANS Engineers were looking into the possibility of using this software for other applications.

On investigation of this software some useful features were found which would meet the requirements laid out by SANS. These are listed below:

4.2.1 Control Screens

Associated with each mimic is a free-format text based control screen, these screens can be configured to display digital and analogue data base items (tag name, tag description and tag status/value), as well as providing the operator with an on screen access to control points.

4.2.2 Production Reporting - Management Information

A facility exists for 10 free format 131 column x 72 line reports to be configured for hard copy output of current, archived and calculated process information. Archived data can also be printed out in the form of a log. Editable text fields are also permitted, allowing the operator to enter comments etc, prior to the report being printed. Each report can be set to print automatically on a time schedule basis as well as on demand under control of a digital tag.

4.2.3 Trending Information Analysis

Turbolink allows for dynamic or archived trending of any data base item.

Dynamic trends:

Four dynamic trend screens are provided, each of which may display 6 variables at a time. Different sampling rates are provided allowing for suitable time windows. Each variable is trended in a different colour and the scale on the y-axis corresponds to the range in engineering units as defined in the data base for the selected variable.

Archived trends:

Standard Turbolink configuration supports 25 archive groups containing 40 user selected tags per group, expandable to 100 groups. Group archive rates can be selected from a variety of time bases: ON DEMAND; at an interval rate specified in SECONDS, MINUTES, HOURS, WEEKS or MONTHS; or under conditions where pre-defined tag value deviations occur. As archived data is written to disk on a circular bases - the newest data over-writes the oldest- facilities exist to copy archived files to an external storage medium when the file space is 80% utilised. Statistical analysis of selected blocks of data is available for display.

4.2.4 Database Status

A dynamic view of the values in the database can be viewed on the Database Status Screen, values may be changed, access level permitting.

4.2.5 Alarm Class Definition

Twenty alarm classes can be configured whereby each tag alarm condition may have its own alarm class. The alarm may be sent to 1 or 2 printers, cause a beep,

be acknowledged, sent to an alarm screen, sent to an alarm log, or sent to an event log.

4.2.6 Operator Messages

A message may be appended to each configured alarm which will give the operator additional information or instructions on what to do. These messages may also be referred to by control screens and production reports.

4.2.7 Recipe Management

Turbolink provides a configurable, disk based recipe management system catering for 150 recipes, each with up to 150 ingredients. This would prove to be very useful for MCO's, various alarm limits, set points could be loaded into the database for the various product runs. A control screen can be configured for selecting the various recipes.

4.2.8 Alarms and Event Logging

12 000 Alarms and 12 000 events can be logged to disk. These alarms/events are recorded chronologically, with the most recent being displayed when entering this option.

4.2.9 Passwords

Password access is provided for up to sixty users, this would be ideal since each operator, supervisor and engineer could have his own password. Thus it would be possible to identify the person acknowledging alarms and/or making changes to certain parameters. Only nine users may edit the passwords, though an individual user may change his own password only, if so desired.

4.2.10 Access Levels

Editing levels may be restricted to various levels of access. The restriction is for editing only, so a user with a lower access level may still peruse the screens without being able to alter any items, this would prove very useful to SANS, since the operators need only acknowledge alarms, while supervisors and engineers would require higher access levels.

4.2.11 Interfacing software

Turbolink has a large number of communication protocol drivers available and the development of these protocols is continual and on-going. Should a device

not be supported Turbolink would develop the necessary communication protocol driver.

In addition to the features listed above Turbolink also provided the following:

4.2.12 Programming

Turbolink provides a programming language with which the user may process the database information. Full floating point mathematical functions are provided.

4.2.13 Mimic Displays

Some features of these displays are listed below:

- 100 mimics with up to 500 variables per mimic
- Dynamic elements incorporate horizontal and vertical analogue bar-graphs, numerical displays and multi-state digital displays in various colours.
- Trend window overlays and dynamic text messages
- Symbol animation.

These displays may also be used to perform the following functions:

- Provides a window to plant operation showing

actual operating information.

- Machinery status may be indicated by change of colours or symbols or operator messages.
- Dynamic bar graphs or numerical displays of analogue values.
- Real-time trending of selectable variables.
- All operations may be password and/or access level protected.

4.3 Fix Dmacs for Dos (System Description, The Fix - Dmacs system:SANS)

This software was still under further investigation at the time of this project and SANS had already purchased this package for use on Drawtwisting plant.

The Fix Dmacs is a very flexible and powerful distributed system software product for factory automation and process control applications.

Fix Dmacs has a unique networking philosophy based on true distributed data sharing, thus allowing data to be shared by various other nodes. Any node on the network only has a database if it communicates directly with an I/O device and is defined as a SCADA node. Variables can be transmitted or requested on a need to know bases. This would certainly would meet managements approval since they

would be able to access data from there offices, and immediately view the plants performance. An example of how this is achieved is shown below (Figure 4.1).

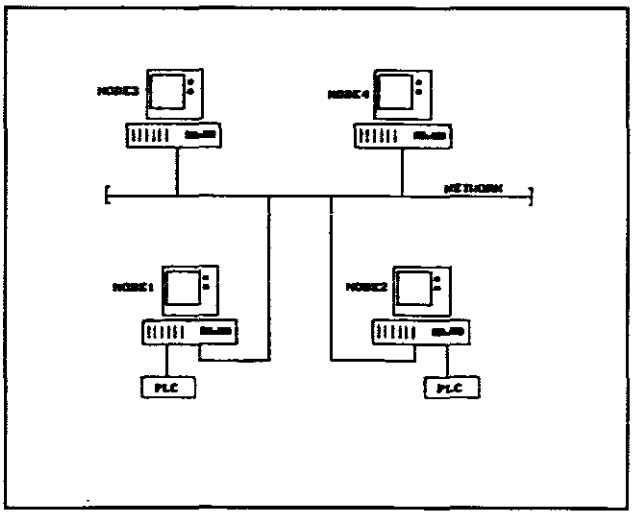

Figure 4.1

Nodes 3 and 4 are regarded as VIEW nodes and can perform functions such as operator viewing, historical trending and report generation. From these two nodes information could be accessed from nodes 1 and 2. Nodes 1 and 2 are both SCADA nodes since each is communicating with an I/O device. In this application this would mean easy access to data and the system could easily be expanded to operate with other systems.

This package allows for full on-line system configuration and access to Dos.

The Dmacs software package is divided into two node types: VIEW and SCADA. The VIEW node contains Base-line Software which is capable of being configured to perform several

functions, while the SCADA node contains software for handling analogue and digital inputs and outputs and alarm handling.

The base-line module provides basic Dmacs support, and acts as the foundation for other Dmacs functions and includes the following:

- The Fix Shell for providing full multitasking support.
- Fix MMS 9FMMSO for local and network wide data access subroutine support.
- Session monitor to monitor network communications.
- Alarm services. Networking support for transmitting and receiving alarm messages among network nodes.
- I/O driver compatibility software.
- Configuration utilities for the System, Password generation and Network configuration.

The SCADA node provides data acquisition and alarm capability, and contains the following programs:

- Data base builder
- Scan alarm and control
- Alarm monitor

- Data base configuration.

The blocks contained in this module which would be required for this application are: analogue and digital inputs, calculation, digital output and real time trend.

Additional modules would have to be purchased to meet the project requirements, these are listed below:

- Graphics support. This provides for either character or pixel graphics in a node performing operator display functions and in addition the Alarm Summary Display program.

- Historical trending. This package provides for collection and disk archiving of analogue and digital data, and contains the following programs: Historical Tag assignment, Historical Trend collect and Historical Trend display.

- Report designer and generator. This is an interactive, free-format report editor, runtime generator and scheduling program.

Dmacs interfacing software:

Fix Dmacs has a large number of communication protocol drivers available and the development of these protocols

is continual and on-going. Should a device not be supported Fix Dmacs would develop the necessary communication protocol driver.

Operating platforms:

DMACS currently runs under 4 different operating systems, namely: Dos, Windows, OS/2 and VMS which will allow DMACS to run on a VAX.

Below is list of additional features of this package:

- Interfacing to third party software including Lotus 123, @Factory, G2, Oracle, Rdb and SQL-based relational databases (eg. FOCUS)
- Expansion capabilities - up to 5120 inputs
- Offers a library of over 60 communication modules
- Standard features modular (eg. Automatic Recipe Download - 256 Recipes supported, Value Triggered Displays - up to 255 values).

4.4 User written software (Broken Filament Detection system: SANS)

As a final option a software package which had been written by an outside contractor was investigated. This package was used to monitor and control the Broken Filament Detection

System. This system has sensors which detects whether a filament of yarn has been broken on any of its 4 positions on a machine. These sensors are wired to a PLC which is in turn linked to the PC containing the Broken filament detection software.

Below is a list of some of the features of this package:

4.4.1 Display Screens

A total of 9 screens were available, one screen for each of the 8 machines (see Figure 4.2) and one summary screen, and provision was made to be able to add additional machines to the system if necessary.

B-FILS2 V2.07 Printer Normal Controls Closed 1993-02-06 14:56:47

Product : 1100f192t1831

Position	A	B	C	D
Last Fil	14:00:35	14:56:04	14:55:44	14:48:06
Rate Value (BpM)	0.0	2.0	0.0	0.0
Rate Alarm Limit	7	7	7	7
2 Hr Ave	1.0	9.5	3.0	3.5
2 Hr Alm Limit	30	30	30	30
24 Hr Ave	1.1	11.6	7.2	6.7
24 Hr A Grade	1.1	11.6	7.2	5.9
Doff Count	0	7	1	4
Control limit	9	9	9	9
Reject Limit	14	14	14	14
Doff Time	00:11:31	00:18:04	00:17:05	00:23:57
Scan Status	ON	ON	ON	ON

PgUp, PgDn = Display Prev/Next History Summary Data (Smry Scrn)

Figure 4.2

4.4.2 Passwords, Alarms and Event Logging (Data)

This system had only one level of password access, this allowed supervisors to edit the display screens as required. The date and time of editing the display screens were logged to disk. Every time an alarm event occurred it would be logged to disk and only printed once it had been acknowledged. Data files logged to disk was of a wrap-around nature and contained data for a week, but this capacity was configurable. The time required to update the data was also configurable. A dynamic view of the values in the database could be viewed on the Summary Screen. A facility existed to download data from a selected file in ASCII format to allow interfacing to software such as Lotus 123. This software was then used to manipulate the data to produce graphs, trends, etc.

4.4.3 Access Levels

Editing levels were restricted to one level of access. The restriction is for editing only, so a user with a lower access level may still peruse the screens without being able to alter any items.

4.4.4 Communication Protocol Drivers

A device driver had been developed to link the PC to the PLC.

4.4.5 Exiting to Dos and Termination of program

The <CTRL> <BREAK> and the <CTRL> <ALT> <DEL> options and any other keyboard activated way to either crash or terminate the program had been disabled. This program could only be exited to Dos via the password. This was done to prevent operators from tampering with the software, playing games, etc.

The computer system installed was flexible so as to allow future modifications or additions to the computer system to be done as easily as possible, with minimum disruption to the existing system. The source code had also been supplied with the software. This was an agreement between SANS and the contractor.

The broken filament detection software had been used very successfully in the plant and after consultations with the outside contractor it was decided that the user written software would also be a very viable option. Below is a brief summary of the software that would be required for this project (for a more detailed specification refer to Appendix C):

Display screens and alarms:

A total of 21 screens were required one screen for each of the twenty individual machines and a summary screen for all the machines. (See Figure 4.3 and 4.4).

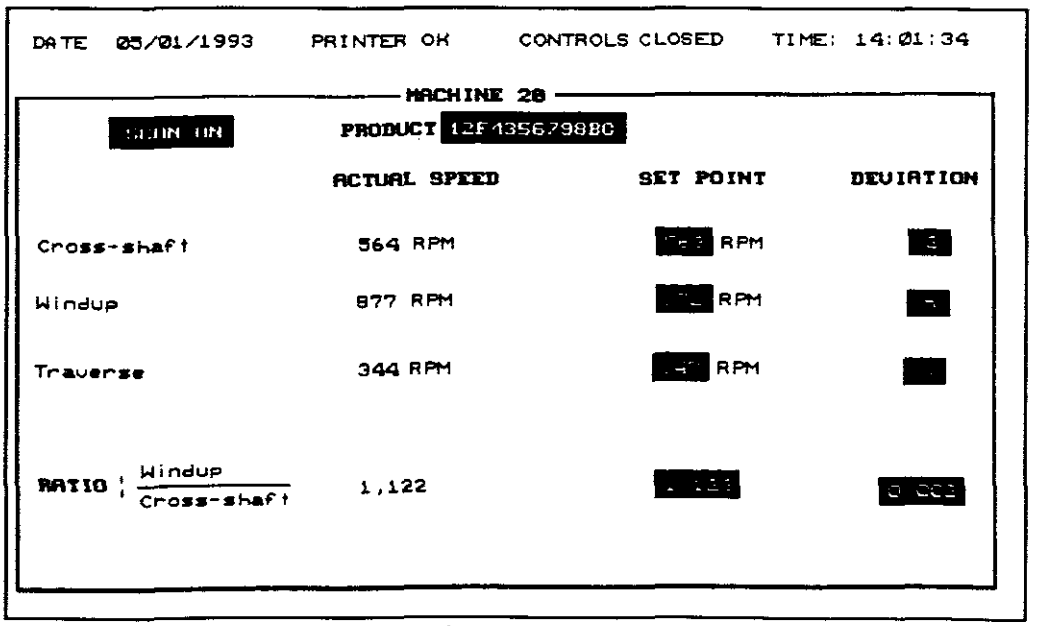

Figure 4.3

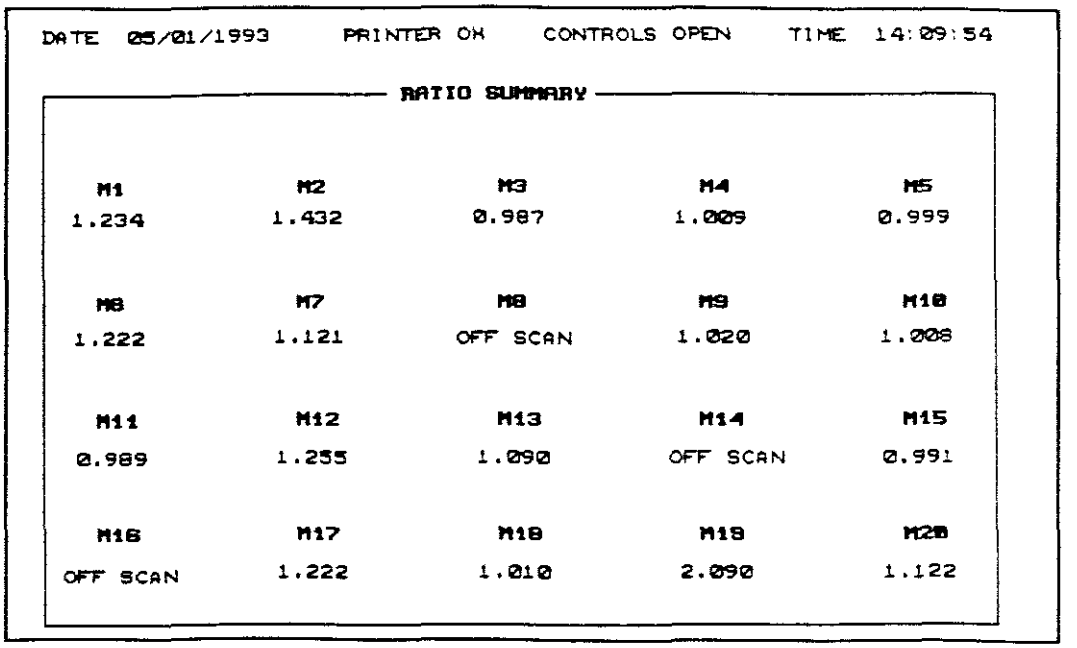

Figure 4.4

All screens had to be updated automatically thus having a real time operating appearance. The Print Screen option had to available at all times to print the currently displayed screens. Function keys had to be programmed to switch between the various screens.

Provision had to be made on the screen to display unacknowledged alarms. The acknowledgement of alarms would required the entry of an operator identity. All alarms had to be logged to disk and printed.

Passwords and Access Levels:

This software had to cater for up to six different supervisor passwords all with the same level of authority. This would allow supervisors to change parameters on the screen for each of the twenty machines (this would be the first level of access). A master password had to be fixed in source code for the Engineers, this would allow access to database and configuration files (second level of access).

Data:

Every setpoint and deviation had to have a file on disk. Everytime a parameter was changed it had to be logged to disk together with the date, time and name of supervisor who made the change. The time for updating data had to be configurable. Data had to be made available in tabular ASCII format to allow it to be imported into packages such

as Lotus 123.

4.5 Selection of Software

All the software options listed above could have been used to provide a solution. The FIX DMACS software was a strong consideration for providing a solution, for reasons of standardisation. But in providing a solution communications interfacing software (i.e. communication protocol driver) had to be developed for each of the software solutions discussed above. The development of these drivers for CYGNUS, FIX DMACS and TURBOLINK would have been very expensive and this cost was excluded from the price of the software. In reviewing the user written software the total cost of this software was initially ±R30 000 (refer to Appendix E) and this figure included the communications protocol driver. In addition the source code would also be supplied with the software.

Once the selection for the software and hardware were finally made it was now possible it implement a solution. This is discussed in Chapter 5.

CHAPTER 5

HARDWARE DESIGN

In reviewing the various hardware options discussed in Chapter 3 a decision was made to design and develop a hardware system that could be used to implement a solution. This decision was based on cost since past records have shown that SANS insist on purchasing electronic equipment from reliable sources for reasons of reliability and backup service. In-house design and construction is only justified when there is no commercially available system to perform the task as specified or the savings resulting from an in-house design are considerable.

Due to the tremendous cost involved to monitor the spinfinish speed via the new locally designed hardware system it was decided not to automate the monitoring of the spinfinish speed. The cost of installing the sensors to monitor the slow spinfinish speed would amount to ±R20 000. This figure includes the following:

a) cost of sensors, and

b) the wiring and installation costs.

5.1 Hardware Design Goals

The proposed system had to be modular to ensure ease of maintenance and improved reliability. Standardisation was also essential for ease and speed of development, installation, commissioning and maintenance.

All electronic components had to be sourced locally and duplicate circuit boards had to be produced to be kept as spare for maintenance purposes. The design goal of the circuit itself was simplicity to enhance maintenance.

5.2 Hardware Design Overview

For an overview of this design refer to Figure 5.1.

Instead of using a panel meter to monitor the shaft speeds on each machine, as discussed in Chapter 3, and thereby increasing the installation costs, three panel meters were used to monitor the Cross-shaft, Windup and Traverse speeds on all the machines. This was achieved by multiplexing the Cross-shaft, Windup and Traverse shaft speeds.

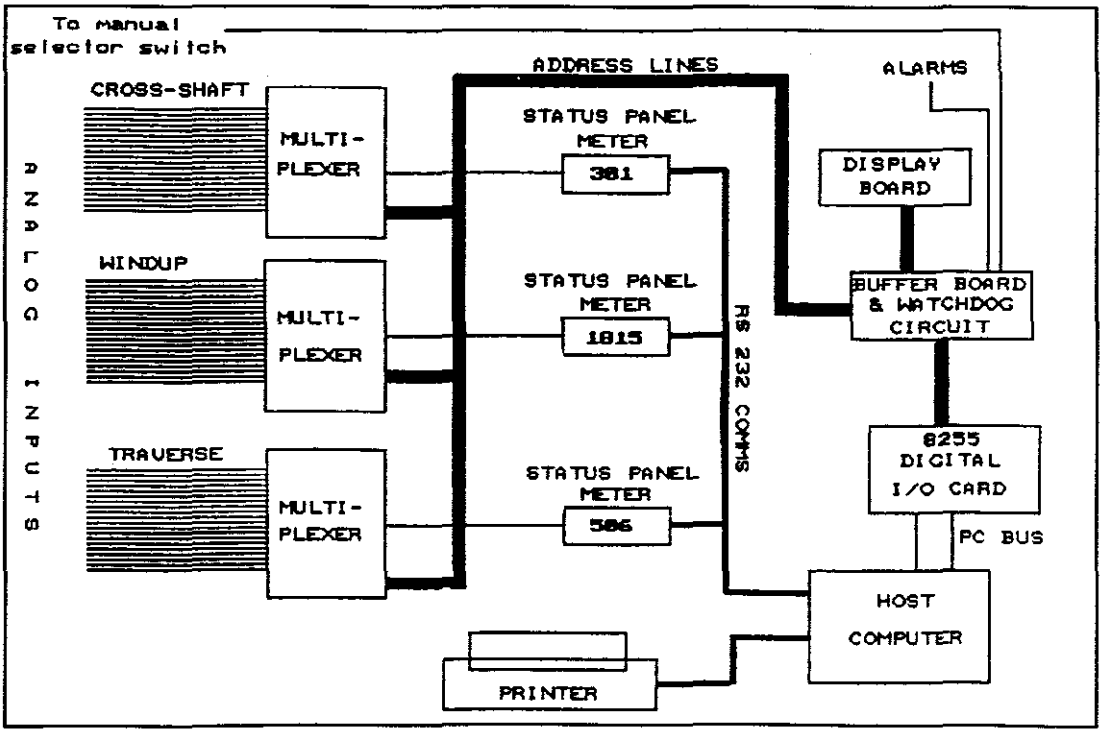

Figure 5.1

A total of 60 sensor outputs was wired to 3 multiplexing boards (i.e. 20 input signals per board), each board was dedicated to multiplex a specific speed on the 20 machines (i.e. one board will multiplex Windup speeds, another Cross-shaft speeds and the third board the Traverse speeds). The Cross-shaft, Windup and Traverse multiplexing boards were designed in such a manner that they were exact duplicates of each other so that each board could be interchanged quite easily and also to limit the number of circuit boards to be kept as spare, thus reducing the running and installation costs still further.

The output signal on each multiplexing board was wired to a STATUS Digital Tachometer. These tachometers (3 off)

were interfaced to the personal computer (PC) via a multidrop RS232C communications network.

5.2.1 Main control board design

A digital I/O card (PC36 - 8255) was used to drive the main control board. From this main control board the three multiplexing boards, display and alarm devices were driven. The three multiplexing boards were addressed simultaneously. This allowed the Cross-shaft, Windup and Traverse speeds of a particular machine to be displayed simultaneously. The main control board was addressed by the computer and the data from STATUS tachometers were read after a settling time of 300msec minimum had expired. The Status panel meter (DM4000C Smart Indicator) required a minimum time of 300msec to update its data. (NOTE: The 300msec settling time for all 3 tachometers were concurrent). This settling time could also be configured remotely using the PC. Refer to section 13 of Appendix D of the Engineering manual. Once the data from all 3 tachometers have been received the main control board would be re-addressed to receive the data from the next machine. This process would continue until all 20 machines were addressed, the cycle would then repeat itself.

Refer to Figure 5.2. In the normal operational mode the PC generates a 1 Hz frequency on one of the digital I/O ports (namely line 6). This frequency is monitored by the main control board and, as long as it is present, the binary

address of the machine selected would be latched by the main control board to accept this address from the PC and not from a counter on the main control board. Should this signal disappear, for example if the PC program crashes, the main control board would automatically go into manual mode where the machine would then be enabled through a switch in the hardware. This enables manual use of the system in a case where the PC is disabled. This yellow push-button switch would be located next to the keyboard on the cabinet which will house the computer and instrumentation hardware.

The main control board and multiplexer boards isolate the plant from the computer using galvanic isolation up to 1500 Volts. This is a safety requirement from SANS.

For a more detailed circuit description refer to page 16 of Appendix D of the Engineering Manual.

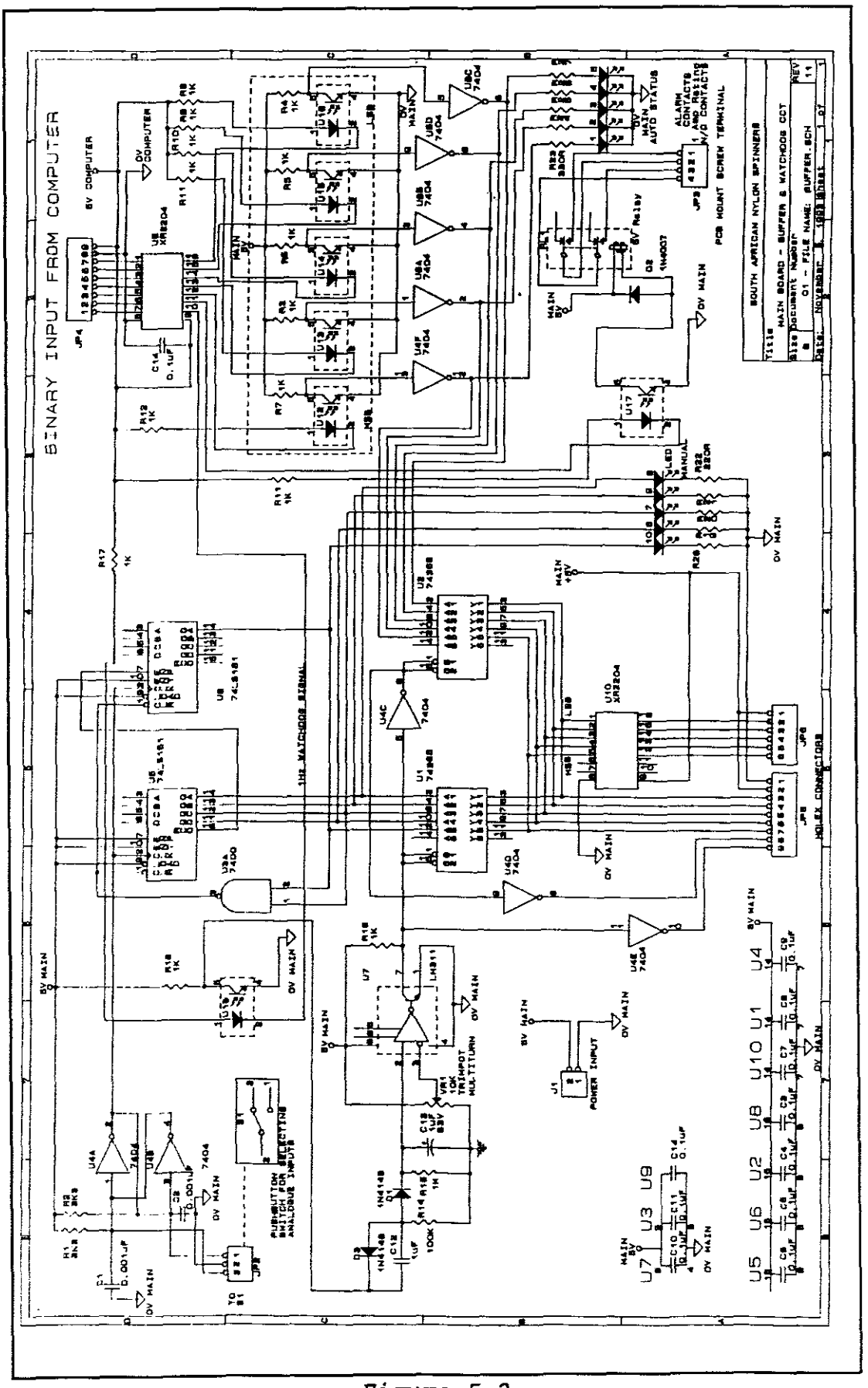
BINARY INPUT FROM COMPUTER
SOUTH AFRICAN NYLON SPINNERS
MAIN BOARD - BUFFER & WATCHDOG CCT
PCB MOUNT SCREW TERMINAL
HOLEX CONNECTORS
1Hz WATCHDOG SIGNAL
PUSHBUTTON SWITCH FOR SELECTING ANALOGUE INPUTS
POWER INPUT
TRIMPOT MULTITURN
ALARM CONTACTS 1 AND RESET N/O CONTACTS
MAIN AUTO STATUS
MANUAL
LED
5V COMPUTER
0V COMPUTER
5V MAIN
0V MAIN
MAIN +5V
U1 U2 U3 U4 U5 U6 U7 U8 U9 U10

Figure 5.2

5.2.2 Multiplexer interface design

Refer to Figure 5.3. The DM4000C panel meter was designed to accept signals from a wide variety of sources and this included signals from a magnetic pick-up sensor. For this reason no signal conditioning would have been required if the sensor had been directly coupled to the panel meter. But since it was necessary to multiplex the input signals, the input signal level was limited to ±12 volts peak-to-peak because of the type of analogue multiplexers used. A clamping circuit was designed to limit the input signal amplitude to ±12 volts peak-to-peak. Three 8-bit analogue multiplexer integrated circuits (I.C.'s) were used to multiplex the 20 input signals to a panel meter. The multiplexers were addressed from the main control board through opto isolators, these isolators were used to protect the main control board from high voltage spikes coming in via the sensors (they provided galvanic isolation up to 1500 volts).

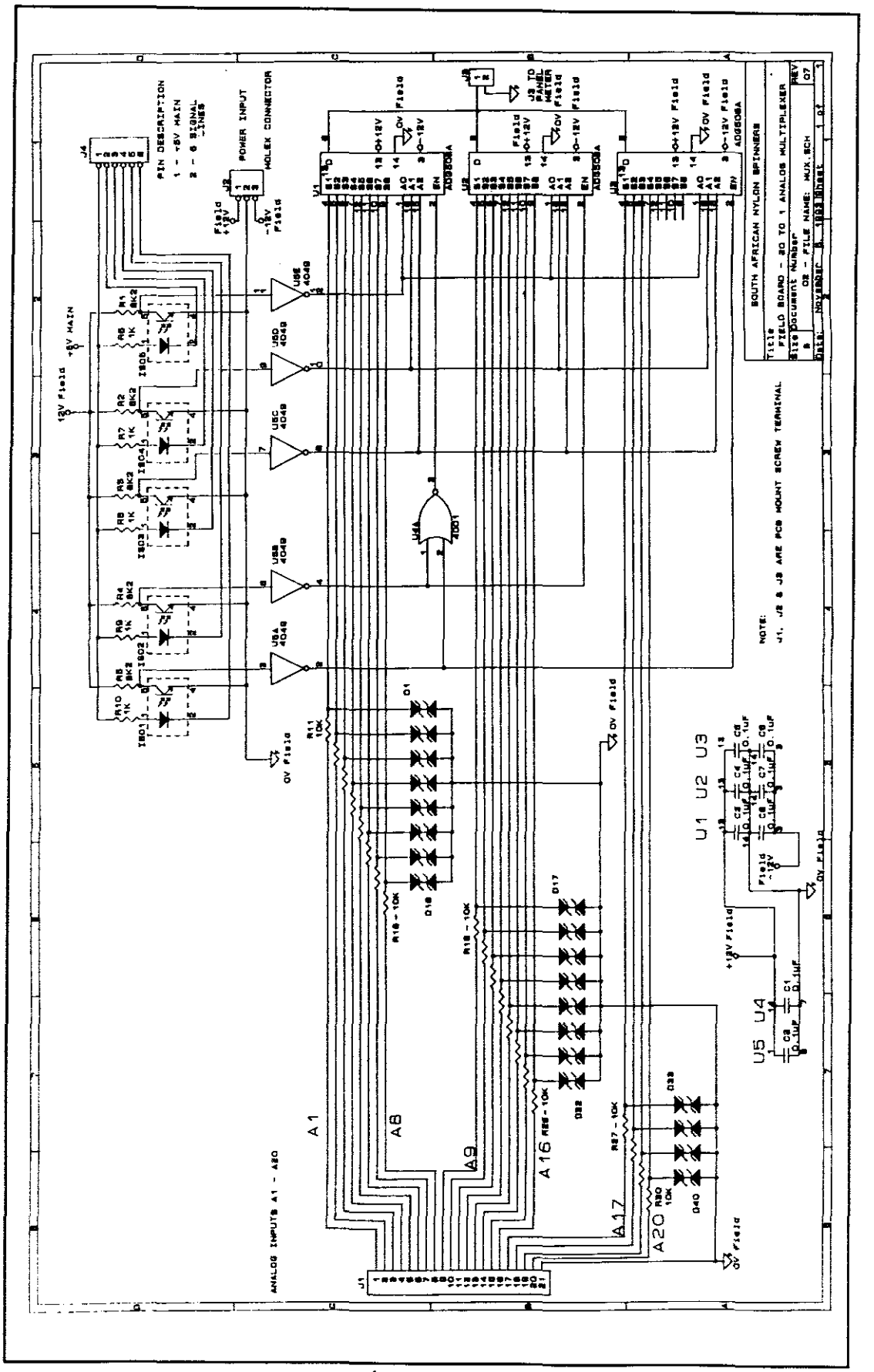
SOUTH AFRICAN NYLON SPINNERS
FIELD BOARD - 20 TO 1 ANALOG MULTIPLEXER
NOTE:
J1, J2 & J3 ARE PCB MOUNT SCREW TERMINAL
PIN DESCRIPTION
1 - +5V MAIN
2 - 6 SIGNAL LINES
POWER INPUT
MOLEX CONNECTOR
ANALOG INPUTS A1 - A20
A1
A8
A9
A16
A17
A20
U1 U2 U3
U5 U4

Figure 5.3

5.2.3 Display board design

Bearing in mind the skills level of the operators, a simple method of displaying which machine was currently being scanned was required.

This was simply done by using two 4-to-16 bit decoders which illuminated the respective light emitting diodes (LED's) above the keyboard in the enclosure. Refer to Figure 5.4. The 'auto' and 'manual' LED's were also displayed in the cabinet. These LED's have a dual function in that it would indicate that the PC was not fully operational, for example a program crash, and a pushbutton switch had to be used if the operators wished to scan through the machines to view there shaft speeds.

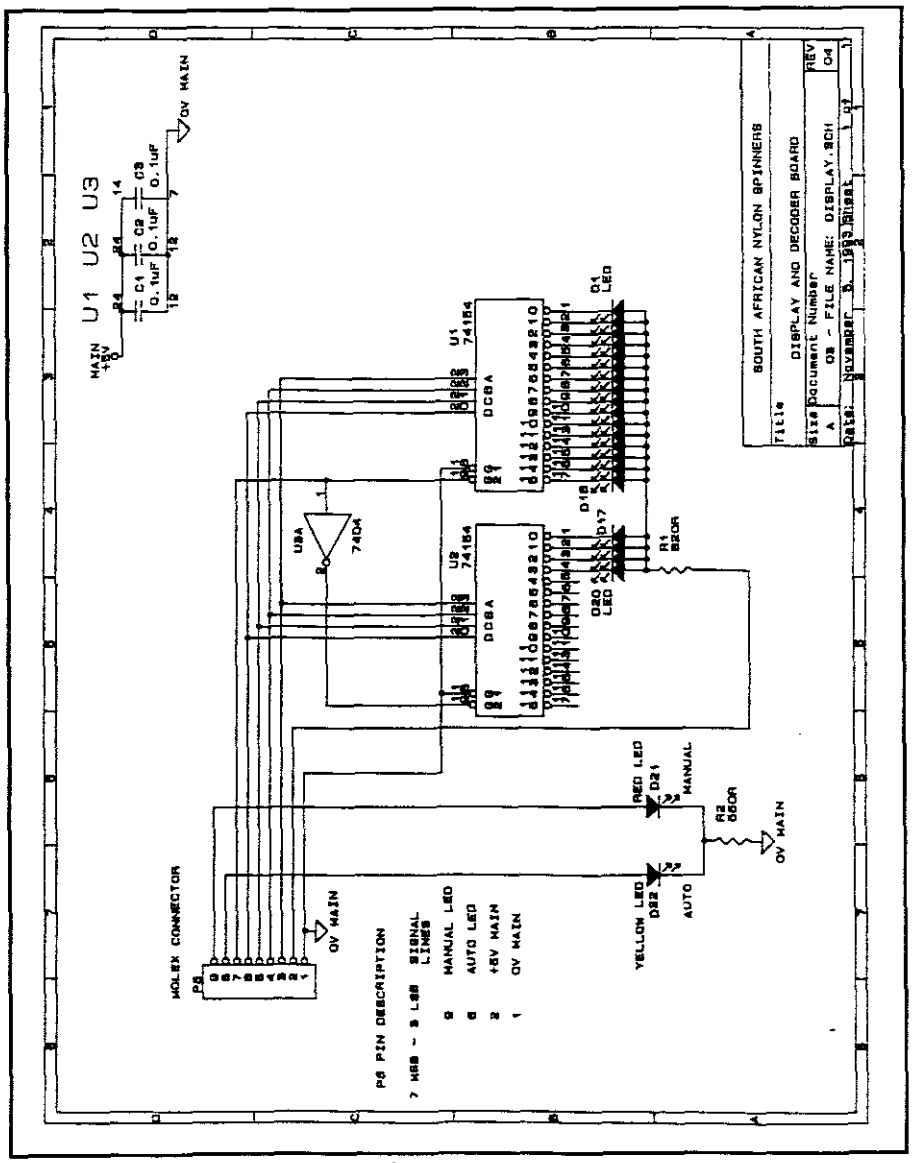

Figure 5.4

5.3 Development and Testing of prototype boards

The development and testing of the prototype boards were conducted at the Peninsula Technikon in Bellville - Cape Town - South Africa.

The circuits for the various boards were first designed on breadboards in the development stage (Figure 5.5). The first board that was developed was the interface board which required that the input signal be limited to ±12 volts peak-to-peak. This was done by placing a resistor (for current limiting) in series with two 12 volt zener diodes placed back to back (see Figure 5.3). The output from this circuit was then linked to one of the eight inputs of the analogue multiplexer. The output of the multiplexer was connected to the low voltage zero crossing analogue input of the STATUS panel meter (DM4000C). A signal generator was used to simulate the sensor input and a frequency range from 100 to 2000 hertz (Hz) was applied with an amplitude range of 0.2 to 50 volts peak-to-peak. The results indicated that the circuit performed well under the conditions stated above and the input frequency equalled that displayed by the panel meter (accuracy within 1%).

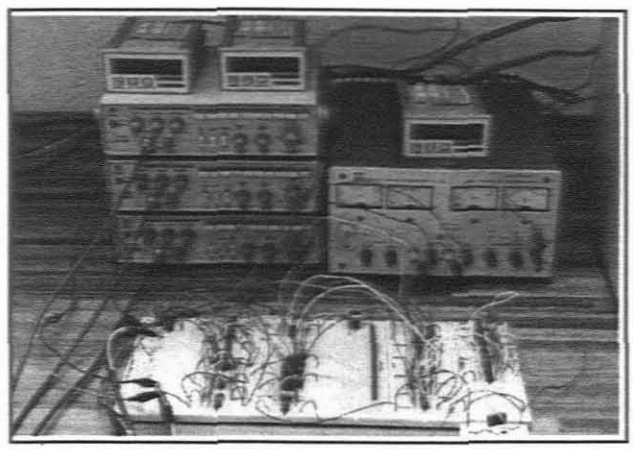

Figure 5.5

The display circuit was simply tested by connecting a 4-bit counter to this circuit (Figure 5.4) that counted from 1 to 20. The circuit worked well in that the 4-bit value that was generated by the counter was displayed by the respective LED.

The main control board (Figure 5.2) was tested using a 4-bit counter (from 1 to 20) to simulate the 8255 I/O PC card. A signal generator was used to simulate the 1Hz watchdog pulse that would normally be generated by the software in the PC. With the 1Hz pulse being present the output of this control board was received from the simulated 4-bit counter input (i.e. from the PC). With this signal removed (eg. a simulated PC malfunction) the output of this board was received from an onboard counter that was triggered by an external switch (i.e. the pushbutton switch as explained in Section 5.2.1).

Once the bread-boarded version of the entire circuit was tested and found to be fully functional, the assembly of the various boards were contracted out to a manufacturing company. (Figure 5.6)

These prototype boards were once again tested as explained above and several faults were discovered, these had been created by the manufacturer. Once the final assembly of the revised circuit boards were received they were tested on site. These circuit boards were tested over a 24Hr period

and performed as expected with the input frequencies matching those displayed by the panel meters.

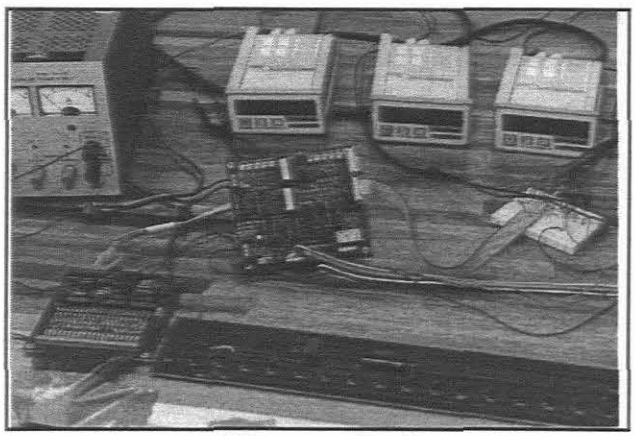

Figure 5.6

5.4 Power Supplies

To withstand the large amounts of noise generated on the mains supplies, four 200 watt computer power supplies were used to drive the instrumentation hardware. This was also done to isolate each of the individual boards from each other and also the computer, up to 1500 Volts. Referring to Figure 5.7 , each of the three field boards has a ±12 Volt direct current (DC) power supply and the main board a 5 Volt DC power supply. The 200 watt computer power supplies were chosen for reasons of standardisation, backup service and reliability.

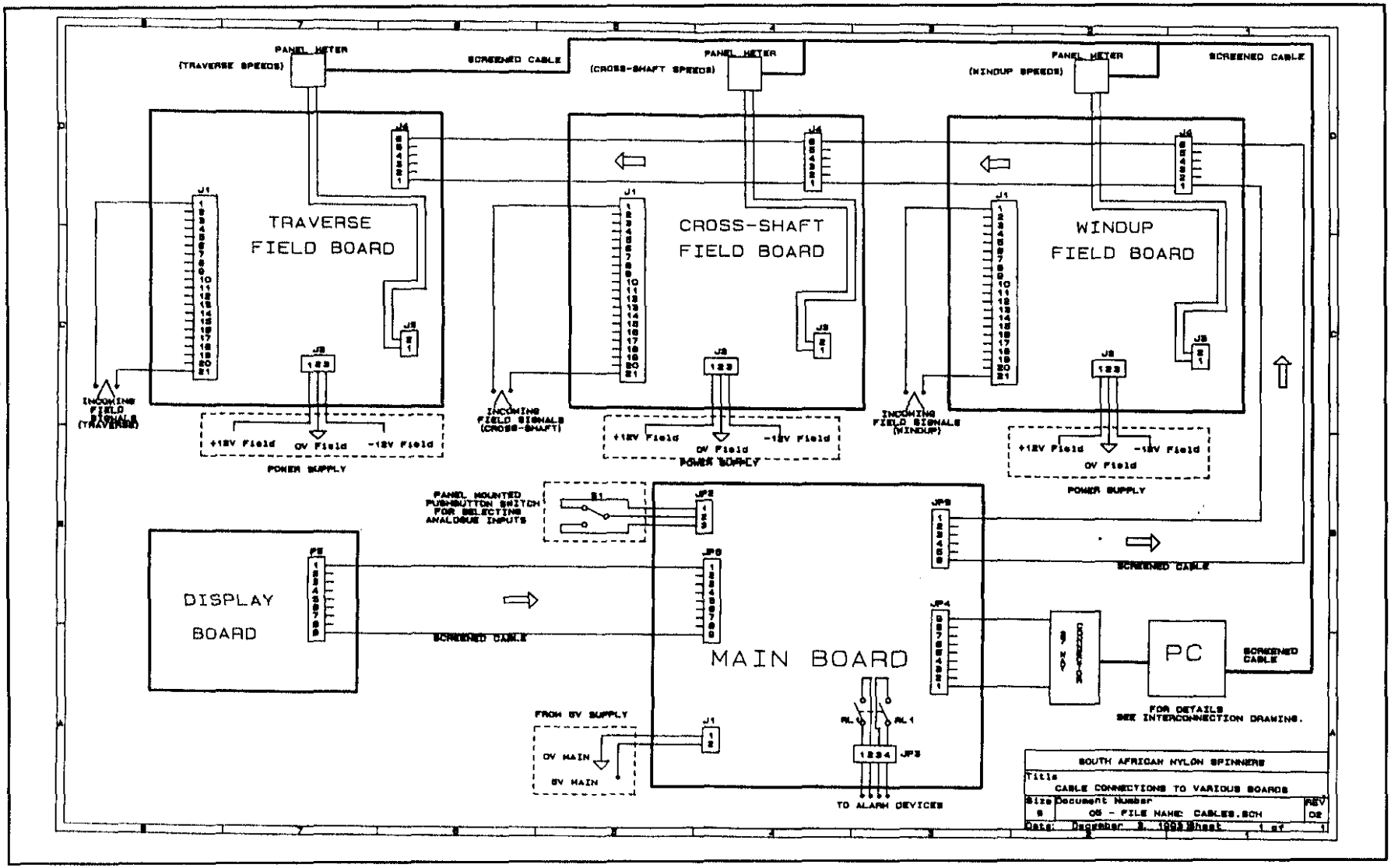
PANEL METER
(TRAVERSE SPEEDS)
SCREENED CABLE
PANEL METER
(CROSS-SHAFT SPEEDS)
PANEL METER
(WINDUP SPEEDS)
SCREENED CABLE
TRAVERSE
FIELD BOARD
CROSS-SHAFT
FIELD BOARD
WINDUP
FIELD BOARD
INCOMING
FIELD
SIGNALS
(TRAVERSE)
INCOMING
FIELD SIGNALS
(CROSS-SHAFT)
INCOMING
FIELD SIGNALS
(WINDUP)
+12V Field
0V Field
-12V Field
POWER SUPPLY
PANEL MOUNTED
PUSHBUTTON SWITCH
FOR SELECTING
ANALOGUE INPUTS
S1
DISPLAY
BOARD
SCREENED CABLE
MAIN BOARD
SCREENED CABLE
PC
SCREENED
CABLE
FOR DETAILS
SEE INTERCONNECTION DRAWING.
FROM 5V SUPPLY
0V MAIN
5V MAIN
RL 0
RL 1
1234
JP3
TO ALARM DEVICES
SOUTH AFRICAN NYLON SPINNERS
Title
CABLE CONNECTIONS TO VARIOUS BOARDS
Size
B
Document Number
05 - FILE NAME: CABLES.SCH
REV
02
Date: December 8, 1993 Sheet 1 of 1

Figure 5.7

5.5 Wiring and Interconnections

Wiring and interconnections between the various circuit boards and other peripheral equipment had to be simple in design to enhance maintenance. Details of the field wiring connections and the interconnections are shown in Appendix N,O,P,Q,R,S and T of the Engineering Manual.

5.6 The speed monitoring cabinet design

The computer monitor had to be mounted inside a cabinet and had to be visible through a sealed window. A membraned, type 101 keyboard had to be used, this keyboard had to be accessible from the outside of the cabinet whilst still being protected against accidental damage. Five power points were to be made available inside the cabinet for PC, printer, power supplies, etc. All panels of the enclosure had to be removable to allow access to terminal strips, printer, instrumentation, etc. See Figures 5.8 and 5.9.

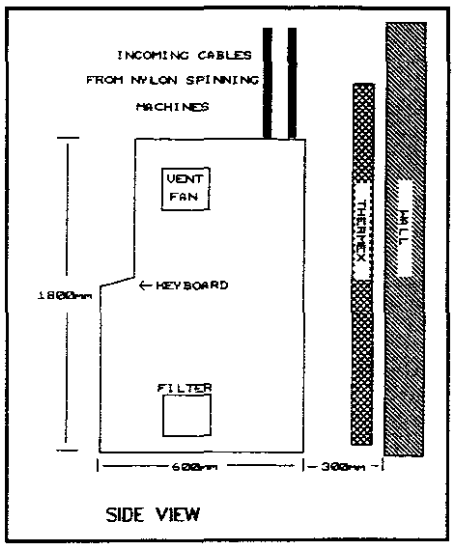

Figure 5.8

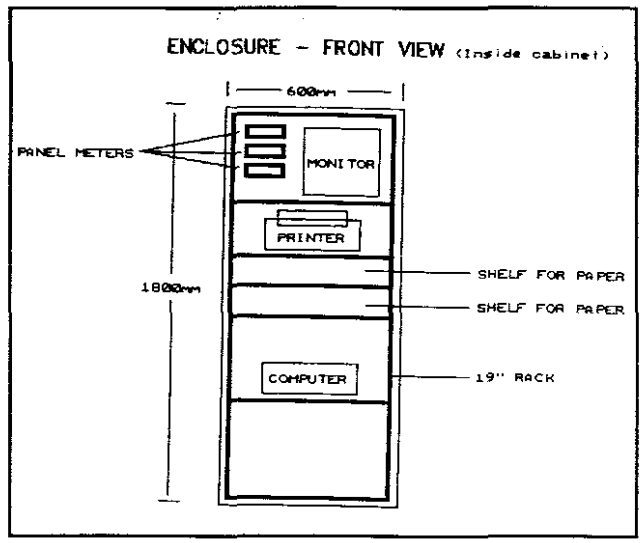

Figure 5.9

5.7 Installation and commissioning

In this Nylon spinning plant the monitoring of the shaft speeds for the various machines were monitored every shift changeover as explained in Chapter 1. For this reason the installation had to be performed as quickly as possible since no form of speed monitoring would be available during this time. The installation started immediately after the speeds were recorded and took approximately 16Hrs to complete.

Once the installation had been completed and the power switched on the hardware has never given problems except in one instance were the connections on a sensor had gone faulty.

Several bugs of varying degree of seriousness were found

in the software but these were quickly ironed out by the contractor.

5.8 Manuals and Training

Three manuals were developed all focusing on how to operate and maintain the speed monitoring system. One of these was targeted for operators, another for supervisors and the third for the engineers and technicians.

The staff working in this particular nylon spinning plant work in three 8 hour shifts and training was given over 2 days for the operators and supervisors. A day was set aside for training the engineers and technical staff who maintain that particular plant. For details on the use of the software and Engineering manual developed please refer to the Engineering manual in Appendix D.

CHAPTER 6

CONCLUSION & RECOMMENDATIONS

The purpose of this study was to implement a suitable computerised method of speed monitoring which could provide the following:

a) produce alarms on over-speed or under-speed,
b) log alarms,
c) produce historical trends, and
d) generate reports.

In addition to the above the system had to be cost effective, and as far as possible, make use of existing technology used on the plant and be simple in design using off-the-shelf items if possible. See Appendix A for original proposal.

This chapter will try to assess each objective set forward to determine its success.

6.1 ASSESSMENT OF PROJECT

6.1.1 Production of alarms on over-speed and under-speed

Once the computerised speed monitoring system was up and running and all the information (i.e. setpoints, deviations and ratio's) relating to the various production runs were entered in the database, the system very successfully produced alarms on over-speed and under-speed ranges. Alarms were produced in the form of a low frequency audio alarm and light beacon to draw the attention of the operators to provide the necessary corrective action. Thus more accurate control could be kept over the speed of the machines and thereby improved the quality of the yarn being produced. Refer also to the software specification in Appendix C.

6.1.2 Logging alarms

Since the logging of alarms were none existent in the previous speed monitoring system, accurate control over the speed of the machines could not be kept. Therefore the quality of the yarn being produced was not always consistent.

By recording and logging this data the production of defective material could be tracked back to the source of

the problem. This in turn saved the company time and money in that it would not dispatch that particular defective batch of material to the customer.

6.1.3 Production of historical trends

The current nylon speed monitoring system, monitors the shaft speeds (i.e. Cross-shaft, Windup and Traverse) at an interval that is set in the software. This interval could be changed to suit the company's needs.

The trend of each machines performance could be monitored over a certain period of time (±2 weeks maximum - depending on the scan rate set for all the machines), by down loading the data onto a spread sheet. Refer to the software specification in Appendix C.

By recording and logging the shaft speeds and ratios data on the nylon spinning machines the system produced other beneficial offshoots. These are listed below:

6.1.3.1 More accurate control could be kept over the speed of the machines and thereby improving quality.

6.1.3.2 By keeping a regular record of the machines' performance this system later revealed that it could be used for preventative maintenance. This saved the company time and

money in that maintenance on these machines could now be scheduled more accurately, before the machines actually broke down.

6.1.4 Report generation

The old nylon speed monitoring system had no formal procedures on generating reports on any changes made to the system as explained in Chapter 1.

With the new speed monitoring system installed any changes made to the system for example a setpoint change, the system would immediately print the name of the person who made the change and the details of the change. This would also be recorded automatically on a file in the software which could be retrieved at a later stage. Refer to the software specification in Appendix C.

6.1.5 Costing

Significant savings were made in developing the hardware and also by making use of user-written software for this project. The final cost of this project came to ±R55 000 , well below the cost estimate of the various other solutions discussed in Chapter 3 and 4. Refer also to Appendix E.

6.2 Recommendations

Success of a production process can be measured by the ratio of useful product to the amount of wasted product. The second measure is customer returns. The decrease or increase in the amount of wasted product and the amount of customer returns as a result of this project cannot be accurately assessed since the yarn goes through two processes before being dispatched to the customer. The first process is the nylon spinning process as explained in Chapter 2 and the second being the drawtwisting process as explained in Appendix B. Further studies can be done to accurately determine the amount of wasted product and customer returns received as a direct impact of the nylon spinning process, thereby determining the success of the production process, using the information received from the computerised speed monitoring system.

Since this project only monitored the speeds of the various machines and no form of automatic control was applied further developments could be done to improve the quality of the product by applying automatic control. Under the old nylon speed monitoring system manual control was applied to all the shaft speeds on every machine. After every MCO the shaft speeds would be setup by the technicians and once the machines was running the speeds would be recorded every shift changeover as explained in Chapter 1. Speeds going out of range between shift changeovers would often go

undetected and thereby producing defective material. The new speed monitoring system eliminates this problem in that alarms would be activated, thereby drawing the attention of the operators to apply the necessary corrective action and thus further reducing the production of defective material.

All shaft speeds are controlled manually by the operators and their response to applying corrective action, when a machine's shaft speed is out of range, is in most cases not immediate.

By providing an automatic control system with a feedback response in the order of a few microseconds, the quality of the yarn produced could be highly improved. This could be done by replacing the hydraulic variable speed gearboxes and motors with inverter drives for better speed control. The instrumentation required to monitor and record the various speeds would also have to be replaced with possibly a PLC.

Spinfinish monitoring is not currently being monitored under the present system due to cost. The cost were escalated by the slow speed at which it runs and the problems associated with installing a suitable sensor/encoder on this shaft of every machine. This would also require the machine to be shut down. Further developments could be investigated to monitor the slow

Spinfinish speed.

Other developments such as recording the length of a full doff cake (roll of yarn) could also be investigated. This could then be incorporated into the existing nylon speed monitoring system.

In conclusion the success of this project was revealed in the achievements of the objectives set forward in the original proposal, the low cost and beneficial offshoots discussed in Section 6.1.

CHAPTER 7

GLOSSARY OF TERMS

Analog multiplexer

This device is an electronic circuit with two or more input terminals and one output terminal. An analog multiplexer is basically a set of parallel electronic switches connected to a common output line. The switches close sequentially with only one switch closed at a time and with switching controlled by the decoder driver.

ASCII

American standard code for information Interchange. This code assigns a number to each numeral and letter of the alphabet. In this manner, information can be transmitted between devices as a series of binary numbers.

Binary

Base two number system. Binary is a system in which 1's and 0's are used to represent numbers.

Host computer

Host computer is one to which devices communicate. The host may download or upload programs, or the host might be used

to program the device.

Interfacing

For example a connection of a PC to external devices.

Local area network (LAN)

A system of hardware and software designed to allow a group of intelligent devices to communicate within a fairly close proximity.

Module

A functional unit of Dmacs software (eg. trending analysis).

Network

A number of computers connected via a cabling system such that each computer can be accessed by a unique, symbolic name. System that is connected to for communication purposes.

Node

A computer with the Dmacs network. Point on the network that allows access.

Noise

Unwanted electrical interference in signal cabling. It can

be caused by motors, coils high voltages, welders, etc. It can disrupt communications and control.

Opto isolators

A device that provides logic separation from field levels.

Reject yarn

Yarn of varying thickness.

RS-232C

A data communication standard that encodes a string of information on a single line in a time sequential format. The standard specifies the proper voltage timing requirements so that different manufacturers devices are compatible.

Supervisory system

Software package used to manage data scanned in from a process plant.

SCADA

Abbreviation for **S**upervisory **C**ontrol **A**nd **D**ata **A**cquisition. The concept is that software is run in a PC or microcomputer to enable communications to a wide variety of devices, this software is typically like a generic building block.

Sensor

Device used to detect change. The outputs of sensors change state when they detect the correct change.

Speed

Used to describe the linear or rotational velocity of a motor, shaft or other object in motion.

Tachometer

Instrument used to convert electrical pulses into a readable form.

Watchdog pulse

A pulse that is used for checking the status of the computer (eg. a computer program crash).

CHAPTER 8

BIBLIOGRAPHY:

1. HOLDSWORTH, B & MARTIN, G 1990; Digital Systems Reference Book: Oxford: Butterworth-Heinemann

2. HOROWITZ & HILL 1980; The Art of Electronics: Cambridge University Press

3. HUNTER, R.P. 1978; Automated Process Control Systems - Concepts and Hardware: USA

4. KIRK, T.E. 1985; A microcomputer controller for a Nylon Spinning machine: Cape Town University Press

5. PARR, E.A. 1993; Programmable Controllers - An Engineer's Guide: England

6. SHERMAN, K. 1981; Data Communications: Reston Publishing Company Inc.

CATALOGUES AND DATA BOOKS:

Data Book 1991; Interface Circuits: Texas Instruments

DM4000 Instruments & Application notes; July 1991: SANS

Dynapar/Max Instruments; 1990: Dynapar

Fix Dmacs for DOS - Product Description & Manuals; 1990: SANS

Inductive Proximity Switches; 1990: Baumer Electric

I/O Systems components; OPTO 22 1992: Eagle Electric

Mul-T-Link - Turbolink - Product Description; 1991: SANS

Red Lion Controls Instruments; 1992: Red Lion Controls

RS Catalogue; July-October 1992: RS Components

APPENDIX A

SANS - BELLVILLE WORKS

ENGINEERING DEPARTMENT

SUBJECT : NYLON SPINNING - SPEED MONITOR SYSTEM

Scope :

To design and implement a speed monitoring system in Nylon Spinning to replace the manual selector switch/tachometer system.

System requirements :

The system must cater for windup, traverse, cross shaft and spin finish roll speed monitoring for 20 spinning machines (i.e. 4 x 20 signals).

The system must provide a simple method for viewing current speeds and alarm conditions.

The following would be desirable features :

A facility for logging alarms historically

A facility for acknowledging alarms and identifying the person doing so

Historical trend displays

Remote access to data (eg alarms) via a network/serial link

The solution must make use of technology already in use at SANS or must be compatible with SANS systems.

The modification should be restricted to replacing the monitoring system and retain the speed sensors on the machine (tooth wheel) if practical.

The budgetary constraints should be observed in selecting a solution.

Project Plan :

1. Inspect present system : hardware, use by operator
2. Determine user requirements and write a specification
3. Investigate suitable technology and present a proposal
4. Perform detail design and costing
5. Gain plant agreement and expenditure sanction
6. Procure items
7. Implement solution
8. Handover, Training, Documentation

A timescale of 3-5 months is envisaged to complete the above project. Regular progress reviews will be held with SANS personnel.

SANS - Student Contractor role's :

SANS will allocate a person to supervise this project and provide the necessary introductions.

The SANS supervisor will act as liazon person on the following matters :

Initial interaction with plant users
Work to be performed on the plant
Selection/contact with suppliers
Purchasing
Installation/Commissioning

It is envisaged that the contractor will be on site on a fairly permanent basis to complete this project and SANS will provide the necessary facilities.

P.K. Kulentic

Section Engineer - Process Control

APPENDIX B

NYLON PRODUCTION

DRAWTWIST

The undrawn cake of yarn is loaded to the creel at the top of the drawtwist machine.

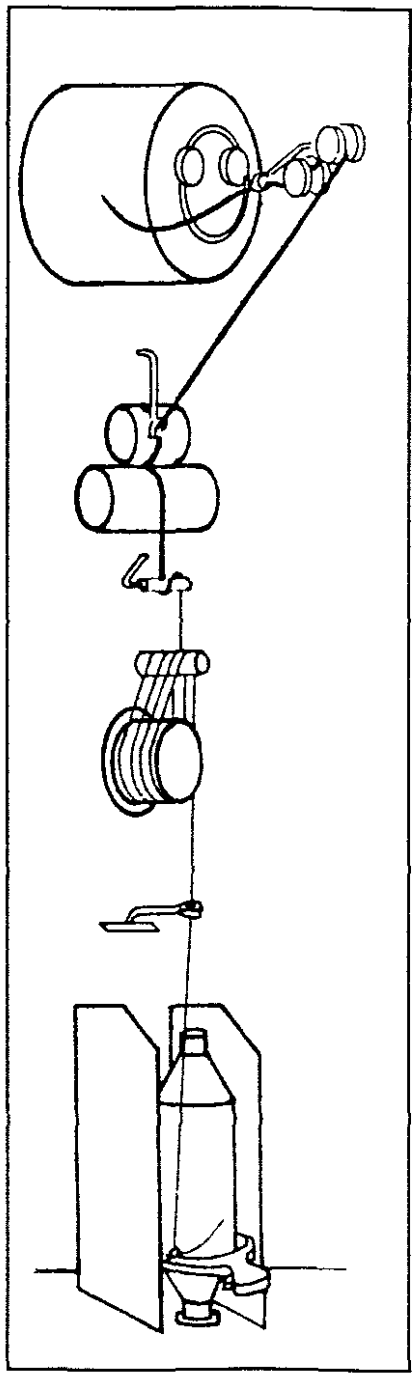

Passing through the pre-tension guides and then behind the top-roll it is unwound from the cake by the feedroll.

The threadline is then wrapped once around the drawpin and four times around the drawroll. Because the drawroll turns faster than the feedroll the yarn is drawn or stretched.

The threadline passes through a balloon guide before passing through a traveller mounted on a ring. It is then wrapped around the spindle and wound up as a

drawn package on the container.

Twist is put into the yarn by the rotation of the spindle. The faster the spindle turns the greater is the twist.

The ring and traveller system compensates for the difference in speed between the Windup speed (the speed of the spindle) and the yarn delivery speed (the speed of the drawroll).

APPENDIX C

SANS - BELLVILLE WORKS

ENGINEERING DEPARTMENT

SOFTWARE SPECIFICATION FOR

NYLON SPEED MONITORING SYSTEM

PREPARED BY LEON ABRAHAMS

INTRODUCTION

The speed monitoring system will provide information on the Traverse, Windup and Cross-shaft speeds & ratio's to the operating personnel in the Nylon spinning plant.

The system will consist of three multiplexing boards each wired to a STATUS panel meter interfaced to a PC. The three STATUS panel meters will be linked to the PC via RS-232C communications. Multiplexing boards will be driven from a digital I/O card placed inside the PC.

This specification describes the software requirements, using a PC as the main processor.

BACKGROUND INFORMATION OF THE PRESENT SYSTEM

The Nylon spinning plant has 20 nylon spinning machines, each having 4 different speeds of which only 3 are presently being monitored, namely Cross-shaft, Windup and Traverse.

Monitoring of the speeds is achieved by measuring the frequency generated by magnetic sensors mounted in the proximity of a toothed gear. The various signals are fed into a selector switch panel for amplification and waveshaping.

The square wave pulses produced are then fed into a tachometer and the selected speed is thus displayed.

Speeds are read on a ±8 hour basis (i.e. every shift changeover), thus unexpected changes inbetween will go undetected. Variations in speed changes the yarn's specifications.

PROPOSED SYSTEM AND ITS OPERATION

A total of 60 sensor outputs will be wired to 3 multiplexing boards (ie. 20 input signals per board), each board will be dedicated to multiplex a specific speed on the 20 machines (i.e. one board will multiplex Windup speeds, another Cross-shaft speeds and the third board the Traverse speeds).

The output on each multiplexing board will be wired to a STATUS digital tachometer (panel meter). These tachometers (3 off) will be interfaced to the PC via a multi drop RS-232 network. A digital I/O card will drive the multiplexing boards and alarm devices. The address lines for these boards will be wired in parallel. The multiplexing boards will be addressed by the computer and the STATUS tachometers read after a settling time of 500msec has expired. (NOTE: The 500msec settling time for all 3 tachometers will be concurrent).

Once the data from all 3 tachometers have been received the mulltiplexing boards will be readdressed to receive the data from the next machine.

In the normal operation mode the PC must generate a 1 Hz frequency on one of the digital I/O ports. This frequency will be monitored by the multiplexer card and as long as it is present the address of the machine selected will be accepted from the PC, should this signal disappear, for example a program crash, the multiplexing cards will automatically go into manual mode where the machine will then be enabled through a switch in the hardware. This enables manual use of the system in a case where the PC is disabled.

SOFTWARE REQUIREMENTS

General

The tachometers must be read 500msec after the multiplexing boards have been addressed (NOTE: This time delay must be off line configurable from 400msec to 2secs).

A facility must exist to manually halt the automatic scanning mode through the use of a password.

The software must cater to display the information as will be discussed in greater detail for 20 machines, each machine having 3 different speeds.

The software must be written in "C" and be preferably compatible with Microsoft C.

The software is required to run on a 80386 PC with a VGA monitor and 107 megabyte hard disk. The software must however be portable to other platforms through the minimum modification at a later stage by SANS software engineers. This implies very thorough documentation and that the source code be supplied with the software. Design documentation must also be supplied with the software.

SANS reserves the right to make and use multiple copies of the software to their own discretion.

SANS undertakes to use the software for their own use only and will not sell it to outside parties for profit.

Communication protocol requirements (STATUS digital tachometer to PC)

Communications between the process computer and the STATUS tachometer is via serial link. The process computer's RS

-232C port is connected via a screened communications cable to the STATUS tachometer.

Data transfer will be in accordance to the protocol of the STATUS tachometer.

Minimum operating requirements

Color can be used to enhance the appearance of the screens.

Program start up

The program will be invoked by the autoexec.bat file. After start up the message " Computer Started " and the time and date must be printed on the printer.

Directly after startup, the parameters must be loaded from disk and the system automatically resume from where it was before the shut down.

Display Screens and Alarms

A total of 21 screens are required, one screen for each of the twenty individual machines (Figure 1, page 106) and one summary screen (Figure 2, page 106) for all the machines.

The first line of all the screens must be the status line, which will constantly display the following information:

DATE DD/MM/YYYY
PRINTER OK / FAULT
CONTROLS OPEN / CLOSED
TIME HH:MM:SS

All screens are to be automatically updated, including seconds displays, thus having a real time operating appearance.

The <PrtScr> option should be available at all times to print the currently displayed screen.

The rest of the information displayed will be discussed in detail under their own sub headings in the paragraphs to follow.

To switch between screens, the following keys must be programmed for use:

- Function Keys <F1> to <F10> to invoke the screens for the respective machines 1 to 10.
- Function Keys <SHIFT> <F1> to <SHIFT> <F10> to invoke the screens for the respective machines 11 to 20.
- <PgUp> and <PgDn> keys pages forward and backwards between screens.
- <Home> key invokes the screen for machine 1
- <End> key invokes summary screen.

The last line of the screen must contain the menus or available options and issue instructions to the operator when required.

The screen must have a screen saver facility of which the time (typically 1 to 20 minutes) can be set or the facility be disabled on the run. In the case of an alarm the screen must automatically be enabled and the display of the first machine to have triggered the alarm, be displayed. This automatic screen selection must only operate when the screen saver was active and not if a screen is being displayed.

Provision should be made on the screen (i.e. 4 lines) to display unacknowledged alarms. The acknowledgement of alarms is done by the entry of an operator identity (I.D.) plus hitting the <ENTER> key thus deactivating the audio alarm/light beacon. (NOTE: The operator I.D. is not a password and can consist of any combination of between 3 to 10 ASCII characters punched in at the keyboard which will be printed in association with the particular alarm on the printer. Should less than 3 characters or 2 consecutive space characters be entered, the acknowledgement should be ignored.) At the time of acknowledgement the alarm message should be printed, the unacknowledged alarm messages on the screen should be cleared and the alarm be logged to disk. The printed and disk messages should look as follows:" DATE - TIME - YYYYYY - ZZZZZZ of machine XX out of range " where YYYYYY represents the operator I.D. of the person who deactivated the alarm. Examples: " 12/01/93 - 13H56 - 857689PIET - CROSS-SHAFT SPEED of machine 15 out of range ", " 13/01/93 - 01H59 - 893456DEON - RATIO of machine 2 out of range ", etc.

In the case where a display screen is active on the monitor and the alarm is invoked by a machine on another screen, the current screen should remain active until the <Space Bar> is pressed in which case the screen which invoked the alarm must be displayed.

An alarm activated by a condition from the screen currently displayed, an operator I.D. entry plus hitting the <ENTER> key will acknowledge the alarm. The same goes if the screen saver was active before the alarm.

In a case where further alarms on other screens become active before the <Space Bar> was pressed, the audio alarm/light beacon must remain active until the last alarm has been acknowledged using the <Space Bar> to page through the screens involved.

The alarm outputs will be driven from the installed I/O card.

Passwords

The following parameters can be changed under password control:

- Product Name,
- Set points for Cross-shaft, Windup, Traverse speeds and ratio,
- Deviations for Cross-shaft, Windup, Traverse speeds and ratio,
- Scan Status. (For all of the above see Figure 1, page 106.)

Software must cater for up to six different supervisor passwords (all with the same level of authority) to be entered. To gain access to these password protected areas, the following sequence must apply:

Press the <ENTER> key, type the password and again press the <ENTER> key. After the desired adjustments have been made again press the <ENTER> key the <L> key and again <ENTER> to lock/close the controls.

The supervisor passwords must be changeable through the use of a master password to be entered as described above. The master password must also give access to the password protected parameters.

The master password can be fixed in the source code while the definable supervisor passwords must be stored on the hard disk for automatic retrieval after boot up. (Suggested Master Password - SPEEDMON).

When supervisor passwords are entered through the Master Password a field must exist where the common name of the password holder can be entered for use with printed messages.

When the password protection is open, the words "CONTROLS OPEN" must appear on the status line of the screen. It should be possible to switch between screens when the controls are open.

All parameters must be stored on disk and automatically selected on program startup.

Changing of Password Protected Parameters

PRODUCT NAME:

Product Name indicates the product which is being produced. The product name can consist of any combination of up to 20 ASCII characters punched in at the keyboard. The changing of the Product Name must take place in real time and the scan task must not be interrupted. First select the machine (screen) where the adjustment is to be made using the appropriate keys as described above. Once the controls are opened i.e. the password protection disabled, by using the arrow keys, the cursor of inverse video can be moved to the Product Name status field. The new name can then be entered, terminated with the <ENTER> key. The new name must automatically be accepted and updated to disk on the selection of another screen. When the new name is accepted the message " DATE - TIME - WWWWWW - Product name on machine XX changed to 111111111111 " must be printed

to the printer. Example: " 13/02/93 - 12h09 - BRUCE - Product name on machine 10 changed to 12F4532GH1OP "

SET POINT and DEVIATIONS:

"SET POINT" indicates the speeds and ratio at which the machine should run and "DEVIATION" indicates the maximum amount of deviation from the set point.

The setting of the set points and deviations must take place in real time and the scan task must not be interrupted. We suggest the following procedure to simplify software coding although this is open for suggestions from the software writer. First select the machine (screen) where the adjustment is to be made using the appropriate keys as described above. Once the controls are opened i.e. the password protection disabled, by using the arrow keys, the cursor of inverse video can be moved around on the screen to select the position where the change must be done.

When the desired position has been reached, the <+> and <-> keys must be used to adjust the value up or down. The values must automatically be accepted and updated to disk on the selection of another screen. When the value/s is accepted, the message " DATE - TIME - WWWWWW - ZZZZZ on machine XX adjusted to AAAA " must be printed to the printer (where WWWWWW represents the name of the authorised

person who made the change). Examples: "12/01/93 - 13H41 - PETER - WINDUP SET POINT on machine 20 adjusted to 1815", "12/01/93 - 14H51 - BRUCE - TRAVERSE DEVIATION on machine 12 adjusted to 4", "13/01/93 - 09H01 - BILLY - RATIO SET POINT on machine 1 adjusted to 1.009". (NOTE: The persons name is not his password but the common name associated with the password.)

SCAN STATUS (ON, OFF or LOCKED):

To set Scan Status ON, OFF or LOCKED, first select the machine (screen) where the adjustment is to be made using the appropriate keys as described above. If the controls are open i.e. the password protection disabled, by using the arrow keys, the cursor of inverse video must be moved to the SCAN STATUS field.

To set SCAN STATUS to ON the <+> key must be depressed and the message " DATE - TIME - WWWWWW - MACHINE XX PLACED ON SCAN " must be printed on the printer (where WWWWWW represents the name of the authorised person who made the change and XX represents the machine number). The words "SCAN ON" should also be displayed on the screen presently displayed.

To set SCAN STATUS to OFF the <-> key must be depressed and the message " DATE - TIME - WWWWWW - MACHINE XX PLACED OFF SCAN " must be printed on the printer. The words "SCAN OFF" must be displayed on the screen presently displayed as well as on the ratio summary screen when selected. All machines that are placed OFF SCAN should be skipped when there scanning turn comes. No alarms for these particular machines should be activated.

To set SCAN STATUS to LOCKED mode the <*> key must be depressed and the message " DATE - TIME - WWWWWW - MACHINE XX SCAN LOCKED " must be printed on the printer. (NOTE: When the scanning task for any machine is in the locked mode all other scanning tasks are disabled. The supervisor must not be able exit the screen until the SCAN STATUS has been changed to either ON or OFF. Once in the locked mode the scanning status must automatically be switched to ON mode, after a time period of 10 minutes has elapsed, only if the scanning status has not already been changed.) The words " SCAN LOCKED " must be displayed on the screen involved. When the scan status is LOCKED all alarms that could arise must be disabled execpt for the printer alarm.

The scan status file must also be stored on disk and the default if no disk file is present must be OFF.

Exiting To DOS And Fool Proof Protection

The <CTRL> <BREAK> and the <CTRL> <ALT> <DEL> options and any other keyboard activated way to either crash or terminate the program must be disabled. The program must make provision for exiting to DOS only if the pass word protection is disabled and the <ALT> <D> key combination is pressed.

Setting The Time

The software should make provision for setting the real time clock on the run. This must be allowed only if the pass word protection has been disabled and would be used when the clock needs correction. An option such as <ALT> <T> to activate the function and then the <+> and <-> keys to increment or decrement the minutes will be acceptable, with the seconds returning to 0 every time one of the <+> or <-> keys is pressed.

Printouts and the Printer

The printer will be connected to LPT1.

The printer must always automatically be advanced by 3 lines every time a message or a screen has been printed to ensure that operators can read messages.

The presence of the printer and paper present must continuously be checked. If the printer runs out of paper, or gets switched off or be de-selected, the audio alarm/light beacon must be activated, and remain on until the printer is operational. In this case, entering the operator I.D. and hitting the <ENTER> key should not deactivate the alarm. At the same time the message "Printer Fault" must flash on the status line. If the printer is restored, the status line must automatically be updated with "Printer OK" and the audio alarm/light beacon be deactivated. The message "Printer Restored" must be printed on the printer.

Should restoring of the printer be impossible, the entry of a supervisors password must disable the printer alarm only with the accompaning message logged to disk, "DATE - TIME - WWWWWW - PRINTER ALARM DISABLED" where WWWWWW represents the supervisors name. The printer alarm must automatically be ENABLED once the printer is restored.

Special care must be taken to prevent a program crash if the printer goes into a not ready state. In such a case all other operations should continue without the printer.

For additional screen prints of any screen, the <PrtScr> button should be used.

Data On Disk

The program must make provision to check the status of any disk drive, including the hard disk, before attempting to read and write, to prevent a program crash if the drive is not ready. In a case of a disk fault or the a drive not being ready, a message must appear on the status line.

Every set point and deviation must have a file on the hard disk. Every time a parameter is changed the new value/s must be written to the file together with the time, date and common name of the supervisor who made the change.

Data files written to disk must be of a wrap around nature and contain data for typically two weeks (this capacity must be configurable). Data must be updated every minute (this time should also be configurable). A facility must exist to download the data from a selected file in ASCII format to the A drive on request without interruption to the scan task. Should the A drive have insufficient space for the data, the operator must be warned on the status line and no program crash should occur.

The summary ratio screen should also be stored on disk in a wrap around file with a configurable capacity, typically 2 weeks. The file need only be updated every hour on the hour. A facility must exist to page back through the summary screens on the screen without interruption to the scan task.

All messages written to the printer should be logged on the disk in a wrap around file with a configurable capacity, typically 1 week.

On the following page are examples of what the individual and summary screens should look like, respectively:

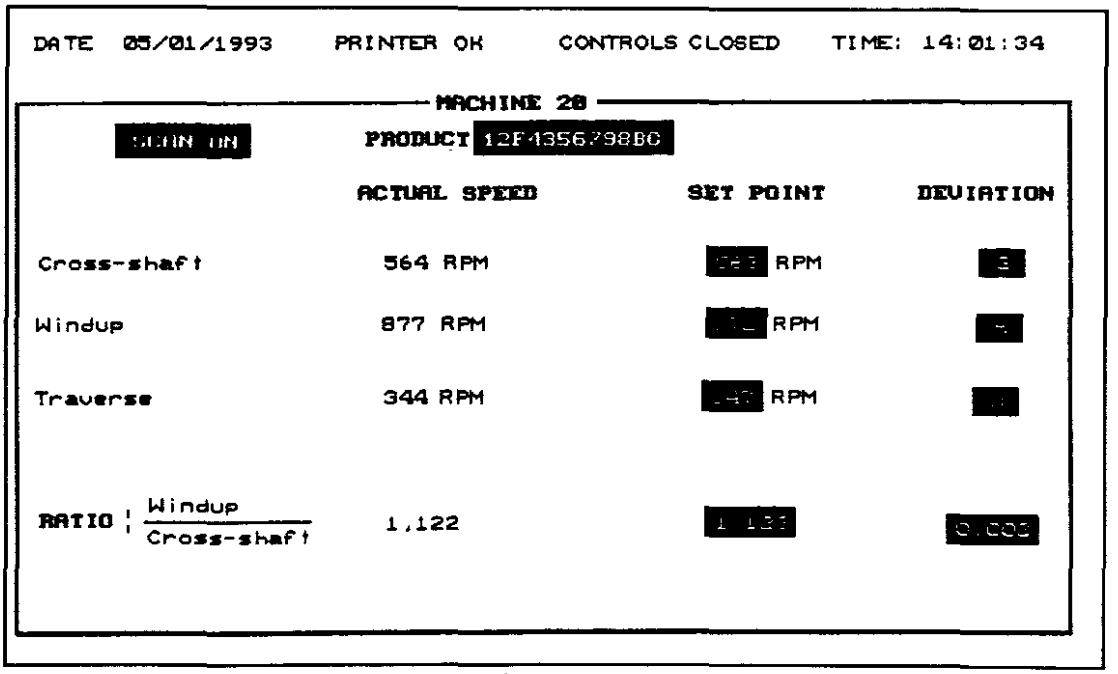

Figure 1

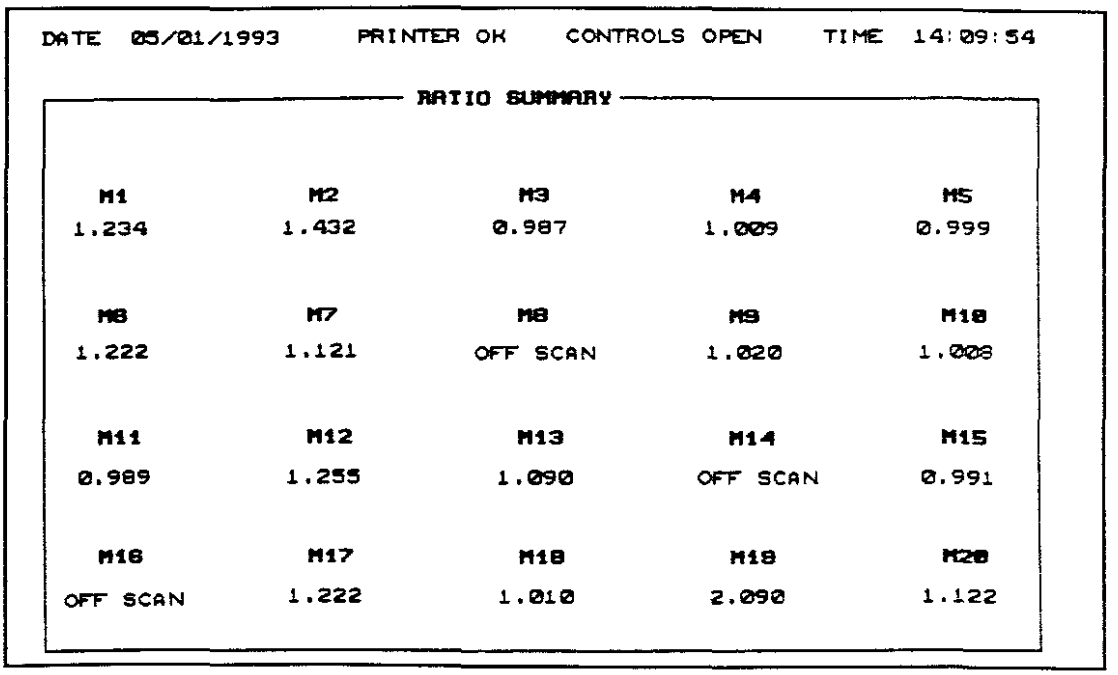

Figure 2

APPENDIX D

COMPUTERISED NYLON SPEED MONITORING SYSTEM

ENGINEERING MANUAL

PREPARED BY: L.G. ABRAHAMS

TABLE OF CONTENTS

ITEM	PAGE NO.
1. PROGRAM STARTUP	111
2. DISPLAY SCREENS	111
3. SCREEN SAVER	112
4. HELP FACILITY	113
5. ALARMS	114
6. ACKNOWLEDGEMENT OF ALARMS	115
7. PRINTOUTS AND THE PRINTER	116
7.1 Installing the printer paper	117
8. MANUAL MODE	118
9. PASSWORDS	119
10. CHANGING OF PASSWORD PROTECTED PARAMETERS	120
10.1 Product Name	120
10.1.1 Entering the Product Name	121
10.2 Set Point and Deviations	121
10.2.1 Setting up the SET POINTS and DEVIATIONS	122
10.3 Scan Status (On, Off or Locked)	123
10.3.1 Setting the SCAN STATUS to ON	123
10.3.2 Setting the SCAN STATUS to OFF	124
10.3.3 Setting the SCAN STATUS to LOCKED	124
10.4 Setting the Time and Date	125
10.5 Setting the Screen Saver Time	126
10.6 Editing your own Password	126
11. EXITING TO DOS and FOOL PROOF PROTECTION	127
12. BACKING UP DATA	127

TABLE OF CONTENTS

ITEM	PAGE NO.
12.1 Summary Data (Ratio's only)	128
12.2 Actual Speeds and Ratio's Data	129
12.3 Printer Data	129
13. EDITING THE NSM.CFG (CONFIGURATION) FILE	130
14. EDITING THE NSM.DBF (DATA BASE) FILE	130
15. EDITING THE DM4000C PANEL METER	131
15.1 Systems parameters submenus	132
16. CIRCUIT DESCRIPTION	132
17 APPENDICES	136
17.1 Appendix A (Display Screen - Machines)	136
17.2 Appendix B (Display Screen - Ratio Summary)	137
17.3 Appendix C (Display Screen - Editable fields shown in inverse video)	138
17.4 Appendix D (NSM.CFG file)	139
17.5 Appendix E (NSM.DBF file)	144
17.6 Appendix F (NS.BAT file)	157
17.7 Appendix G (Circuit Diagram - Display and Decoder)	158
17.8 Appendix H (Circuit Diagram - Main Board)	159
17.9 Appendix I (Circuit Diagram - Field Board/ Multiplexer Interface)	160
17.10 Appendix J (Component List)	161
17.11 Appendix K (Component Layout - Display)	165
17.12 Appendix L (Component Layout - Main Board)	166

TABLE OF CONTENTS

ITEM PAGE NO.

17.13 Appendix M (Component Layout - Field Board)..167

Wiring Diagrams

17.14 Appendix N (Multiplexer & Panel Meter).....168

17.15 Appendix O (Display & Computer).....169

17.16 Appendix P (Alarm & Manual Pushbutton Switch)170

17.17 Appendix Q (Cross-shaft Field Board).....171

17.18 Appendix R (Traverse Field Board).....172

17.19 Appendix S (Windup Field Board).....173

17.20 Appendix T (Cable connections).....174

17.21 Appendix U (Cable connections to PC).....175

PLEASE NOTE: Sections 1 to 12 also forms part of the OPERATORS AND SUPERVISORS MANUAL.

1. PROGRAM STARTUP

After start up the message "NSM STARTED" together with the date and time will be printed on the printer.

2. DISPLAY SCREENS

A total of 21 screens are available for display, one screen for each of the twenty individual machines (Appendix A, page 136) and one summary screen (Appendix B, page 137) for all the machines.

The first line of all the screens will constantly display the following information (See Appendix A, page 136):

NSM V1.02

PRINTER NORMAL / FAULT

CONTROLS OPEN / CLOSED

DATE YYYY/MM/DD

TIME HH:MM:SS

All screens are automatically updated. To switch between screens, the following keys have been programmed for use:

- Function Keys <F1> to <F10> to invoke the screens for the respective machines 1 to 10.
- Function Keys <SHIFT> <F1> to <SHIFT> <F10> to

invoke the screens for the respective machines 11 to 20 (eg. <SHIFT> <F1> = machine 11, <SHIFT> <F5> = machine 15).

- <PgUp> and <PgDn> keys pages forward and backwards between screens.
- <Home> key invokes the screen for machine 1.
- <End> key invokes summary screen.

3. *SCREEN SAVER*

The screen has a screen saver facility which switches off (blanks out) the screen after a preset time. When the screen is blank it can easily be reactivated by pressing any key on the keyboard.

If the screen saver is active and an alarm is triggered, the screen will automatically be enabled and the display of the first machine to have triggered the alarm, will be displayed. This automatic screen selection will only operate when the screen saver is active and not if a screen was being displayed.

In the case where a display screen is active on the monitor and an alarm is invoked by a machine on another screen, the current screen will remain active until the <CTRL> key is pressed in which case the screen which invoked the alarm will be displayed.

4. *HELP FACILITY*

The last line of the screen contains the available options and can be invoked by pressing the <ALT> <F1> keys. Below is a list of all the options that will sequentially be displayed everytime the <ALT> <F1> key combination is pressed. Highlighted sections shows the relevant keys that need to be pressed in order to invoke the various options.

- **<ALT> <F1>** = Display Next Help Message (supervisors to log on first)
- **<CTRL>** = Silence Siren
- **<ALT> <A>** = Acknowledge Alarm
- **<PgUp>, <PgDn>** = Display Previous/Next Machine
- **<ENTER>** = Controls Open/Closed
- **<ALT> <H>** = Toggle Display of History Summary Data (only from Smry Scrn)
- **<PgUp>, <PgDn>** = Display Prev/Next History Summary Data (from Smry Scrn)
- **<ALT> <C> (from Smry Scrn)** = Backup Summary Data (Stiffy disk required)
- **<ALT> <C> (from Machine Scrn)** = Backup Machine Data (Stiffy disk required)
- **<ALT> <B>** = Backup Printer Data (Stiffy disk required)
- **<Arr-Up>, <Arr-Dn>, <Tab>, <Shift> <Tab>** = Select Next Field for Editing

- **<+>, <->, <*> (when controls open)** = Machine Scan ON, Off, Locked
- **<Ins> (while editing)** = Toggle Insert/Overwrite Mode
- **<ALT> <S>** = New Screen Saver Time
- **<ALT> <T>** = Set Time
- **<Alt> <E>** = Edit Own Password
- **<ALT> <M>** = Toggle Manual Mode ON/OFF
- **<ALT> <E>** = Edit All Passwords
- **<ALT> <X>** = Exit to Dos

5. ALARMS

5.1 Alarms (i.e. light beacon and audio alarm) will only become active under the following conditions:

5.1.1 Speed/s and/or ratio's out of specified range,

5.1.2 Printer switched off, out of paper or if printer is placed Off-Line (i.e. deselected).

5.2 Audio alarm and light beacon can only be deactivated by pressing the <CTRL> (Control) key.

NOTE: If the alarm goes off as a result of section 5.1.2 the audio alarm and light beacon cannot be silenced by pressing the <CTRL> key. Once the printer has been restored to its proper operation the alarm will automatically be deactivated. Should this be impossible the supervisor/engineer must open the

controls (refer to Sections 7 and 9). The opening of the controls will automatically deactivate the audio alarm and light beacon, the supervisor/engineer can then close the controls.

5.3 In a case where further alarms on other screens become active before the <CTRL> key was pressed, the audio alarm/light beacon will remain active until the last alarm has been deactivated using the <CTRL> key to page through the screens involved. NOTE: The sequence in which the alarm screens will appear will be the sequence in which the alarms occurred.

5.4 Unacknowledged alarms (refer to Section 6 - Acknowledgement of Alarms) will be reactivated after a period of about 2 minutes. This time is configurable, refer to Section 13 and Appendix D on page 139.

6. ACKNOWLEDGEMENT OF ALARMS

When an alarm is activated by a particular machine a message will be displayed on the screen (see Appendix C, page 138).

Provision has been made on the screen (i.e. 4 lines) to display unacknowledged alarms.

The acknowledgement of alarms is done by pressing the <ALT> <A> key combination and then entering an OPERATOR I.D. plus pressing the <ENTER> key. To deactivate the audio alarm/light beacon use the <CTRL> key. (NOTE: The operator I.D. is not a password and can consist of any combination of between 3 to 10 characters punched in at the keyboard which will be printed in association with the particular alarm on the printer. Should less than 3 characters or 2 consecutive space characters be entered, the acknowledgement will be ignored.)

At the time of acknowledgement, the alarm message will be printed, the unacknowledged alarm messages on the screen will be cleared and the alarm will be logged to disk.

7. *PRINTOUTS and the PRINTER*

The Print Screen (<PrntScrn>) option is available at all times to print the currently displayed screen.

The printer will always automatically be advanced by a certain number of lines, (the number of lines the printer can be advanced is programable in the NSM.CFG file, see Appendix D, page 139), every time a message or a screen has been printed to ensure that the operators/supervisors can read the messages.

The presence of the printer and paper-present is continuously checked. If the printer runs out of paper, or gets switched off or be de-selected, the audio alarm/light beacon will be activated, and remain on until the printer is fully operational. In this case, pressing the <CTRL> key will not deactivate the alarm. At the same time the message "Printer Fault" will be displayed on the status line. If the printer is restored, the status line will automatically be updated with "Printer Normal" and the audio alarm/light beacon will be deactivated. The message "Printer Normal" together with the TIME and DATE will be printed on the printer.

Should restoring of the printer be impossible, the entry of a supervisors/engineers password will disable the printer alarm with the accompanying message logged to disk, "DATE TIME XXXXXX PRINTER ALARM DISABLED" where XXXXXX represents the supervisors/engineers name. The printer alarm will automatically be enabled once the printer is restored.

7.1 Installing the Printer Paper

Open hinged side door of cabinet (key required). Place paper on shelf immediately beneath printer. Feed paper to printer and then place printer ON-LINE. (NOTE: The printed paper must fall to the bottom of the cabinet.)

8. MANUAL MODE

In the event where the computer goes faulty, (i.e. the red light emitting diode on the display inside the cabinet will light up, indicating that the system is now in Manual Mode), the supervisor/engineer can then step through the machines manually using the yellow (manual step) button placed on the left hand side of the computer keyboard. (NOTE: the red light emitting diodes labelled M1 to M20 will indicate which machine is presently being scanned.)

The Manual Mode can also be activated by opening the controls using the Engineering password and by pressing the <ALT> <M> key combination. The words "Manual Mode ON" will also appear on the line just below the status line. Once in this mode all scanning tasks and alarms will be disabled. The yellow manual step button can then be used to step through the machines. To exit this mode press the <ALT> <M> key combination again. The words "Manual Mode OFF" will appear on the line just below the status line and the yellow auto LED will light up, indicating that the system is back on line.

9. PASSWORDS

The software caters for up to ten different passwords, all with the same level of authority except for one, to be entered.

To gain access to password protected areas (see Section 10 - Changing of Password Protected Parameters), the following sequence applies: Press the <ENTER> key, type the password and again press the <ENTER> key. After the desired adjustments have been made again press the <ENTER> key, the <L> key and again the <ENTER> key to "close" the controls.

Passwords are stored on the hard disk for automatic retrieval after boot up.

When the password protection is open, the words "CONTROLS OPEN TO XXXXXX" appears on the status line of the screen (where XXXXXX is the name of supervisor). It is possible to switch between screens when the controls are open.

PLEASE NOTE: Sections 10 to 12 can only be performed once the Controls have been Opened.

MASTER PASSWORD: ***CYBER*** (Note this password cannot be changed!)

10. CHANGING of PASSWORD PROTECTED PARAMETERS

The following parameters can be changed under password control:

- Product Name.
- Set points for Cross-shaft, Windup, Traverse speeds and ratio.
- Deviations for Cross-shaft, Windup, Traverse speeds and ratio.
- Scan status.
- Real time and date. (For all of the above see Appendix C, page 138)
- Screen saver time.
- Editing own password and all other passwords.

All parameters are stored on disk and automatically selected on program startup. Data can also be backed up once the controls have been opened. (See Section 12 - Backing up data).

10.1 Product Name:

Product Name indicates the product which is being produced. The product name can consist of any combination of up to 20 characters punched in at the keyboard. The changing of the Product Name takes place in real time and the scan tasks will not be

interrupted.

10.1.1 Entering the Product Name

First select the machine (screen) where the adjustment is to be made using the appropriate keys as described previously (see Section 2). Once the controls have been opened i.e. Password Protection disabled, by using the <Tab> key, the cursor of inverse video can be moved to the Product Name status field. The new name can then be entered. The new name will automatically be accepted and updated to disk on the selection of another screen. When the new name is accepted the message "DATE TIME XXXXXX Machine WW Product name changed to 1111111111111" will be printed to the printer. Example: "1993-10-21 12:09:44 BRUCE Machine 1 Product name changed to 123F32T1O9"

10.2 Set Point and Deviations:

"SET POINT" indicates the speeds and ratio at which the machine will run and "DEVIATION" indicates the maximum amount of deviation from the set point. The setting of the Set Points and Deviations takes place in real time and the scan tasks will not be

interrupted.

10.2.1 Setting up the SET POINTS and DEVIATIONS

First select the machine (screen) where the adjustment is to be made using the appropriate keys as described previously. Once the controls have been opened, by using the <Arr-Up>, <Arr-Dn>, <Tab> and <Shift> <Tab> keys, the cursor of inverse video can be moved around on the screen to select the position where the change has to be made.

When the desired position has been reached, the value can then be entered. These values will automatically be accepted and updated to disk on the selection of another screen. When the value/s is accepted, the message "DATE TIME XXXXXX Machine WW ZZZZZZ speed YYYY changed to AAAA" will be printed to the printer (where XXXXXX represents the name of the supervisor who made the change). Examples: "1993-09-25 13:41:55 PETER Machine 20 Cross-shaft speed setp changed to 322", "1993-10-01 14:51:09 BRUCE Machine 2 Traverse speed dev changed to 15", "1993-11-02 09:01:00 BILLY Machine 1 Cross-shaft speed dev changed to 10".

(NOTE: The persons name is not his password but the common name associated with the password.)

10.3 Scan Status (ON, OFF or LOCKED)

To set Scan Status to ON, OFF or LOCKED, first select the machine (screen) where the adjustment is to be made using the appropriate keys as described previously. Once the controls have been opened, by using the <Arr-Up>, <Arr-Dn>, <Tab> and <Shift> <Tab> keys, the cursor of inverse video can be moved to the SCAN STATUS field.

10.3.1 Setting the SCAN STATUS to ON

To set SCAN STATUS to ON the <+> key must be depressed and the message "DATE TIME XXXXXX Machine WW placed ON scan" will be printed on the printer (where XXXXXX represents the name of the supervisor who made the change and WW represents the machine number). The words "ON SCAN" will also be displayed on the screen presently displayed.

10.3.2 Setting the SCAN STATUS to OFF

To set SCAN STATUS to OFF the <-> key must be depressed and the message "**DATE TIME XXXXXX Machine WW placed OFF scan**" will be printed on the printer. The words "OFF SCAN" will be displayed on the screen presently displayed as well as on the Ratio Summary screen when selected. All machines that are placed OFF SCAN will be skipped when their scan turn comes. No alarms for these particular machines will be activated.

10.3.3 Setting the SCAN STATUS to LOCKED

To set SCAN STATUS to LOCKED mode the <*> key must be depressed and the message "DATE TIME XXXXXX Machine WW scan locked " will be printed on the printer. The words "LOCKED" will be displayed on the screen involved. When the scan status is LOCKED all alarms that could arise will be disabled except for the printer alarm. (NOTE: When the scanning task for any machine is in the locked mode all other scanning tasks are disabled. The supervisor will not be able to move to another screen until the SCAN

STATUS has been changed to either ON or OFF. Once in the locked mode the scanning status will automatically be switched to ON mode, after a time period of 1 minute has elapsed, only if the scanning status has not already been changed. Should the supervisor close the controls while in the SCAN LOCKED mode, that specific machine will automatically be placed in the SCAN ON mode.)

10.4 Setting the Time and Date

The software makes provision for setting or correcting the real time clock and date without interruption to the scan task. This will be allowed only if the pass word protection has been disabled.

The time and date can be set by pressing the <ALT> <T> key combination and the new time and date can then be entered, by using the <Tab> and <Shift> <Tab> keys to move between fields. (Time format: HOURS : MINUTES : SECONDS - Date format: YEAR : MONTH : DAY). To exit this mode press the <ENTER> key to save the changes. (NOTE: Pressing the <Esc> key will not save the changes.)

10.5 Setting the Screen Saver Time

The screen saver time can be set by pressing the <ALT> <S> key combination and the new screen saver time can then be entered. To exit this mode press the <ENTER> key to save the changes. (NOTE: Pressing the <Esc> key WILL NOT save the changes. Time is indicated in minutes and entering a zero will disable this facility.) The default value can be changed in the NSM.CFG file (see Section 13).

10.6 Editing your own password and all other passwords

This can be done by pressing the <ALT> <E> key combination. Two fields will appear on the bottom of the screen, the left hand side field will indicate the engineers password and the right hand side field will indicate the common name associated with that password, this name will also be displayed on the Status Line. A new password can then be entered. To edit other passwords press the <Arr-Dn> or <Arr-Up> keys. To exit this mode press the <ENTER> key to save the changes. (NOTE: Pressing the <Esc> key WILL NOT save the changes.) The passwords are kept in the PASSWORD.DAT file.

11. EXITING to DOS and FOOL PROOF PROTECTION

The <CTRL> <BREAK> and the <CTRL> <ALT> <DEL> options and any other keyboard activated way to either crash or terminate the program have been disabled. To exit to dos open the controls with the engineers password and press the <ALT> <X> key combination.

12. BACKING up DATA

The program will check the status of any disk drive, including the hard disk, before attempting to read and write, to prevent a program crash if the drive is not ready. In a case of a disk fault or the a drive not being ready, a message will appear on the screen. (Eg. Floppy Drive Error!)

Every machine has a file on the hard disk containing its setpoint and deviation parameters (see Appendix E, page 144). Every time a parameter is changed the new value/s will be printed to the printer together with the date, time and common name of the supervisor who made the change. These new value/s will also be stored on disk. Should the data files be erased for any particular reason, the default values shown in Appendix E (page 144) will appear on the screen once the program is started again. To edit the data base file (NSM.DBF) the engineer must exit to Dos and at the prompt the following should be typed "edit nsm.dbf"

(Refer to Appendix E - Note: The highlighted parameters should not be changed. Should any of the other parameters be changed all the files with the extension *.DAT, except the PASSWORD.DAT file, in the NSM directory must be erased before restarting the program so that the new parameters can be loaded into the system.)

12.1 Summary Data (Ratio's only)

The summary ratio data is stored on disk every hour on the hour for two weeks. To page back through the summary data on the screen, select the summary screen. Once the controls have been opened, the <ALT> <H> key combination can be pressed and by using the <PgUp>/<PgDn> keys the previous records can be viewed without interruption to the scan task. To exit this mode press the <ALT> <H> key combination again. To backup the summary screen data place a 1.44 Megabyte Stiffy Disk into the drive on the computer and press the <ALT> <C> key combination. The following message will be display on the screen "Please wait: Backing up \TEMP\SUMMARY.DAT". Once the data has been backed up the words "Backup complete!" will appear on the screen. Remove the Stiffy Disk and store in a save place.

12.2 Actual Speeds and Ratio's Data

The actual speeds and ratio's data files written to disk is of a wrap around nature and contain data for approximately two weeks. This data is updated every minute. To download the data, select the appropriate machine, insert a 1.44Mbyte Stiffy Disk into the drive on the computer and press the <ALT> <C> key combination. Should the stiffy disk have insufficient space for the data, the supervisor will be warned. (NOTE: Only data for one machine can be backed up at a time. Example: when backing up the data for machine 20 the following words will appear on the screen "Please wait: Backing up \TEMP\20SPD.DAT", for machine 11 "Please wait: Backing up \TEMP\11SPD.DAT"). Once the data has been backed up the words "Backup complete!" will appear on the screen. Remove the Stiffy Disk and store in a save place.

12.3 Printer Data

All messages written to the printer are logged to disk and will be kept for one week. To backup this data place a Stiffy Disk into the drive on the computer and press the <ALT> <B> key combination, the following words will appear on the screen "Please wait: Backing up \TEMP\PRNTEVNT.DAT". Once the data has been backed up the words "Backup complete!" will appear on

the screen. Remove the Stiffy Disk and store in a save place. (NOTE: Printer Data can be backed up from any screen.)

13. EDITING the NSM.CFG (CONFIGURATION) FILE

To edit this file you will need to exit to Dos as described in Section 11. The following prompt will appear on the screen "C:\NSM>_". To edit the NSM.CFG file type the following: "EDIT NSM.CFG". The file shown in Appendix D (page 139) will appear on the screen. Note only the highlighted parameters should be changed if necessary, changing the other parameters could cause the program to malfunction. Please read the instructions carefully before making any changes. Be sure to save any changes that you may have made.

14. EDITING the NSM.DBF (DATA BASE) FILE

To edit this file you will need to exit to Dos as described in Section 11. The following prompt will appear on the screen "C:\NSM>_". To edit the NSM.DBF file type the following: "EDIT NSM.DBF". The file shown in Appendix E (page 144) will appear on the screen. NOTE: Only the parameters not highlighted (default values) should be changed if necessary, changing the highlighted parameters could cause the program to malfunction. Please read the instructions carefully before making any changes. Be sure

to save any changes that you may have made. If any changes have been made erase all the files, with the extension *SPD.DBF, under the NSM directory before restarting the computer, to ensure that the new parameters will be loaded upon startup.

15. EDITING the DM4000C PANEL METER

Please refer to the DM4000C Smart Indicator Instruction Manual. The INPUT SUBMENU (Refer to pages 27 to 33) has been configured as follows:

Sig B

rAtE

FALSE

040,00

01850

8888

00040

01850

1 SEC

nonE

SEC

00001

15.1 Systems parameters submenus

The PASSWORD SUBMENU (Refer to pages 50 and 51) has been configured as follows: (Before entering this mode a password has to be entered - namely 4000)

4000

SEtPt

trUE

The COMMUNICATIONS SUBMENU (Refer to pages 52 to 53) has been configured as follows:

9600

1 for CROSS-SHAFT / **2** for WINDUP / **3** for TRAVERSE

SLAVE

16. CIRCUIT DESCRIPTION

Please refer to Appendix G, H and I. The multiplexer (Appendix I, page 160), display (Appendix G, page 158) and buffer (Appendix H, page 159) boards are driven via the computer's PC36 I/O card.

System overview and its operation

A total of 60 sensor outputs are wired to 3 multiplexing boards (i.e. 20 input signals per board), each board is

dedicated to multiplex a specific speed on the 20 machines (i.e. one board will multiplex Windup speeds, another Cross-shaft speeds and the third board the Traverse speeds).

The output on each multiplexing board is wired to a DM4000C STATUS digital panel meter. These panel meters (3 off) are interfaced to the computer via a multidrop RS232 "network". A PC36 I/O card drives the multiplexing boards and alarm devices via the buffer board; the address lines for these boards are wired in parallel. The multiplexing boards are addressed by the computer and the STATUS tachometers are read after a settling time of 10secs has expired. (NOTE: The 10secs settling time for all 3 tachometers are concurrent and this settling time can be configured in the NSM.CFG file. Refer to section 13). Once the data from all 3 three tachometers have been received the multiplexing boards are readdressed to receive the data from the next machine.

In the normal operation mode the PC generates a 1Hz frequency on one of the digital I/O ports (namely line 6). This frequency is monitored by the buffer board and as long as it is present the address of the machine selected will be accepted from the PC. Should this clock signal disappear, for example a program crash, the buffer board will automatically switch to manual mode where the machine can then be enabled through a switch (yellow manual step

button) mounted on the cabinet. This enables manual use of the system in a case where the PC is disabled.

Refer to Appendix H (main board - buffer & watchdog circuit)

U9 - This IC is used to buffer the inputs from the PC36 I/O card.

U12, U13, U14, U15, U16, U17 and U18 - These are opto isolators which are used to isolate the PC36 I/O card from the rest of the circuit, isolates up to 1500 volts.

U4F and U8 - These IC's are used to invert the signal level and drive the auto status LED's.

U4D and U4E - Used as buffers to drive the LED's.

U4A and U4B - These IC's form part of a switch debounce circuit.

U5 and U6 - 4-bit up counters, cascaded to count up from 0 through to 19 by using U3A.

U1 and U2 - Tri-state buffers, U1 accepts data from U5 and U6 when 1Hz watchdog pulse is not present. U2 accepts data from the computer's PC36 I/O card via U9, U4F and U8A/B/C/D when 1Hz watchdog pulse is present.

U7 - Voltage comparator, forms part of watchdog circuit. Should 1 Hz pulse disappear the output of this IC will go low i.e. U1 will be activated.

U10 - This IC is used to buffer this board from the three multiplexer boards and to source higher drive currents.

RL1 - Relay for driving audio and alarm outputs.

Refer to Appendix I (field board x3 - analog multiplexer)

Please note that 3 of these boards are used, each board is dedicated to monitor a specific speed on all the machines.
ISO1, ISO2, ISO3, ISO4, ISO5 - Opto isolators used to buffer this board from the main board.
U5 - This IC is used to invert the signal level.
U4A - This IC ensures that only one of the 3 multiplexer IC's (i.e. U1, U2 and U3) are ever switched on at any one time.
U1, U2 and U3 - Analog Multiplexer IC's used to switch through 20 analog input signals. The multiplexer IC's are addressed via U5.
Note: Diodes D1 - D40 and resistors R11 - R30 forms part of a clamping circuit to limit input voltage to 12 Volts or less.

Refer to Appendix G (display & decoder board)

U1 and U2 - 4-line to 16-line decoder IC's used to drive LED's.
U3A - Hex Inverter IC used to ensure that only one of the decoder IC's are switched on at any one time.
Note: LED's D1 to D20 represent the machine numbers and LED's D21 and D22 represents the status of the computer (i.e. auto or manual mode).

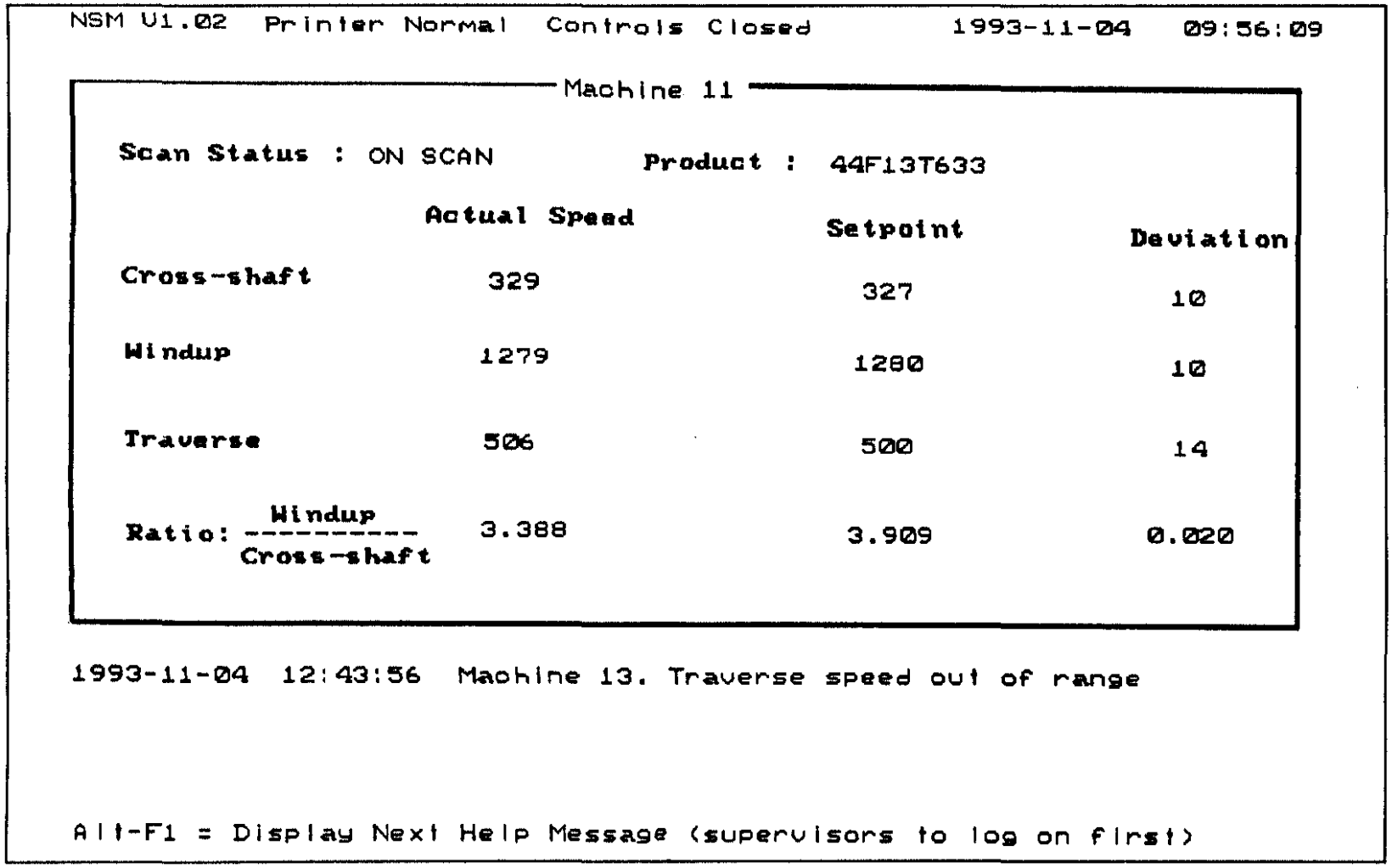
NSM U1.02 Printer Normal Controls Closed 1993-11-04 09:56:09
Machine 11
Scan Status : ON SCAN
Product : 44F13T633
Actual Speed
Setpoint
Deviation
Cross-shaft
329
327
10
Windup
1279
1280
10
Traverse
506
500
14
Ratio: Windup / Cross-shaft
3.388
3.909
0.020
1993-11-04 12:43:56 Machine 13. Traverse speed out of range
Alt-F1 = Display Next Help Message (supervisors to log on first)

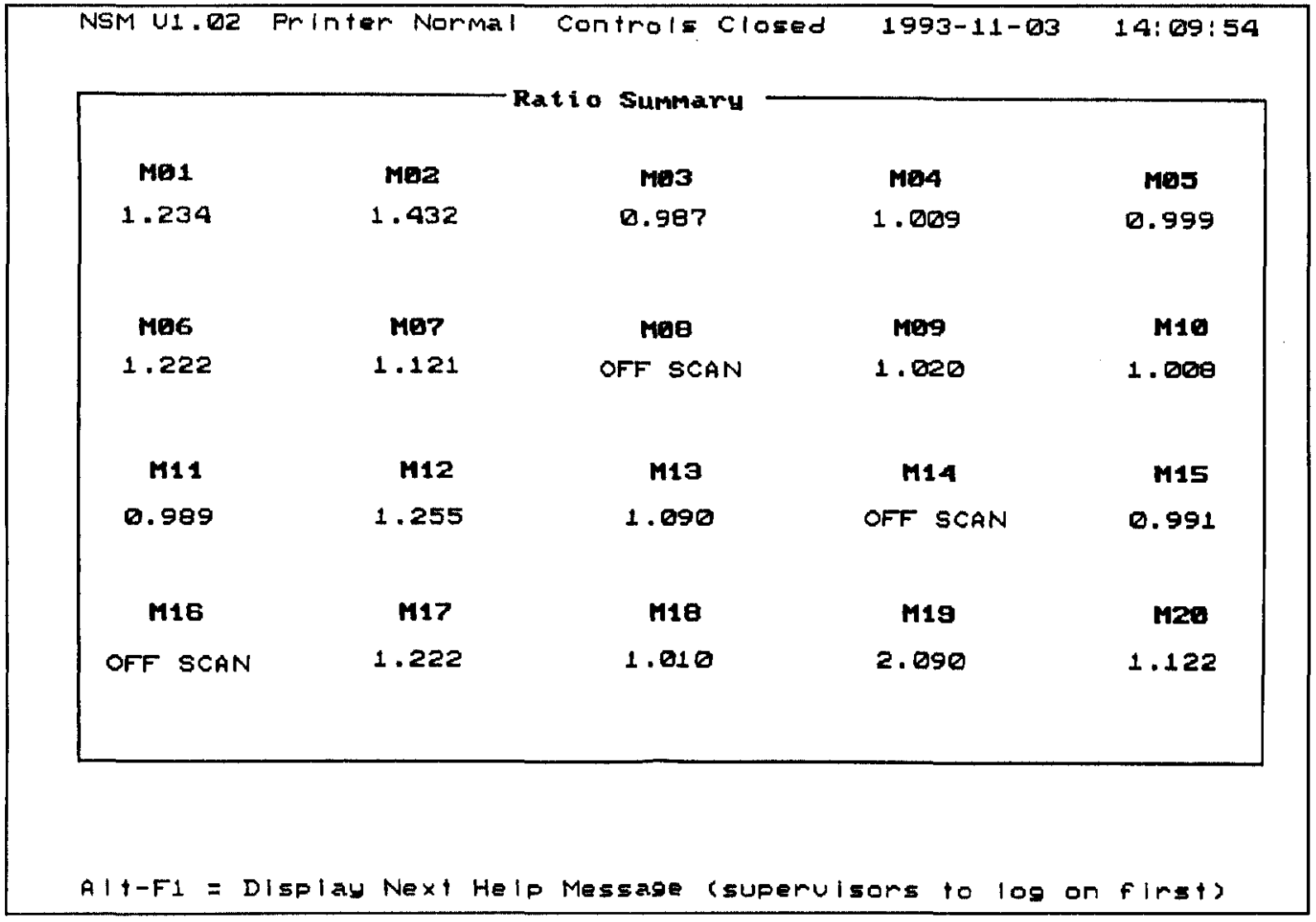
NSM V1.02 Printer Normal Controls Closed 1993-11-03 14:09:54
Ratio Summary
M01 1.234
M02 1.432
M03 0.987
M04 1.009
M05 0.999
M06 1.222
M07 1.121
M08 OFF SCAN
M09 1.020
M10 1.008
M11 0.989
M12 1.255
M13 1.090
M14 OFF SCAN
M15 0.991
M16 OFF SCAN
M17 1.222
M18 1.010
M19 2.090
M20 1.122
Alt-F1 = Display Next Help Message (supervisors to log on first)

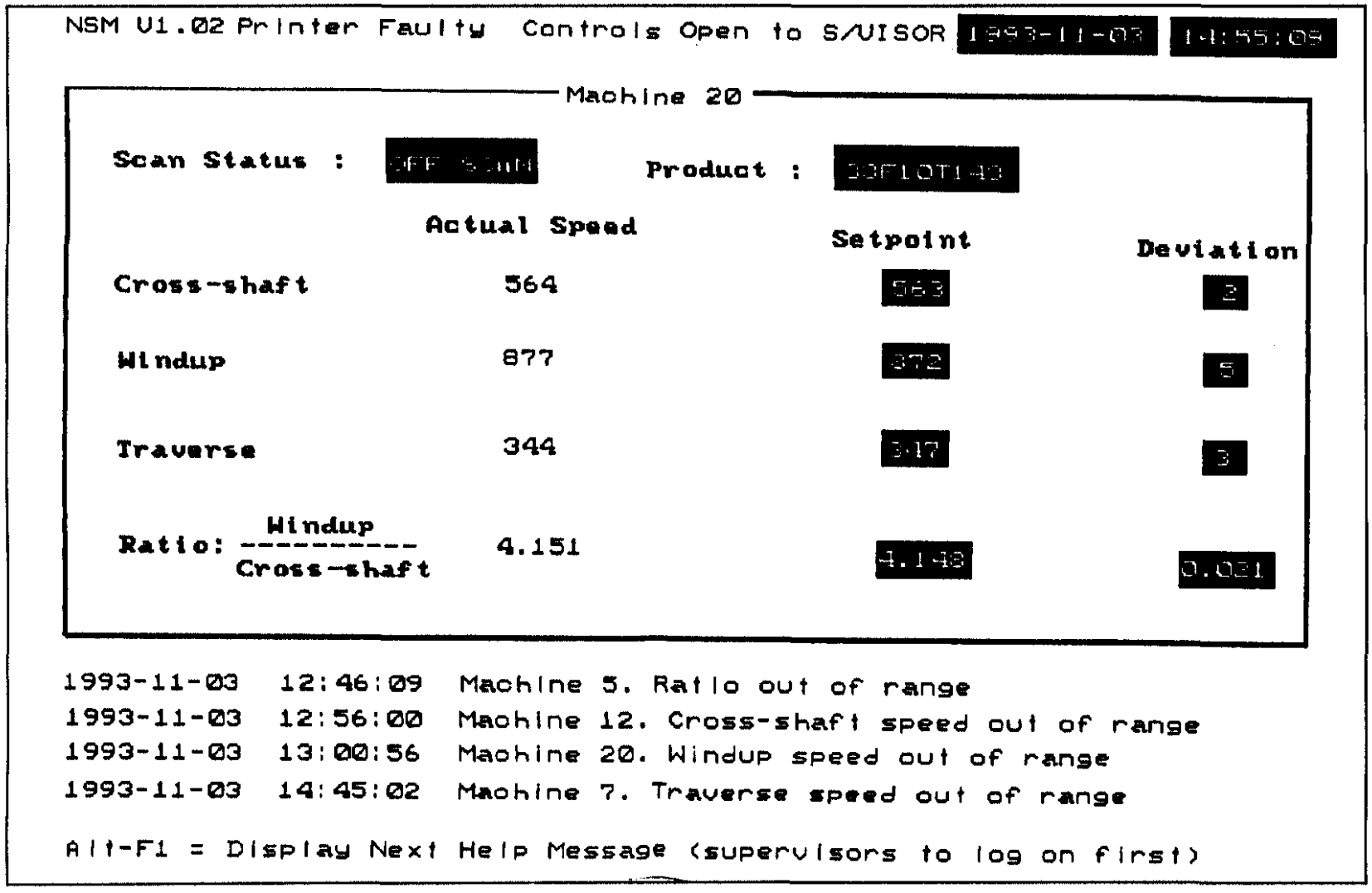
NSM V1.02 Printer Faulty Controls Open to S/UISOR 1993-11-03 14:55:09
Machine 20
Scan Status : OFF SCAN
Product : 33F10T143
Actual Speed
Setpoint
Deviation
Cross-shaft 564 563 2
Windup 877 872 5
Traverse 344 347 3
Ratio: Windup / Cross-shaft 4.151 4.148 0.021
1993-11-03 12:46:09 Machine 5. Ratio out of range
1993-11-03 12:56:00 Machine 12. Cross-shaft speed out of range
1993-11-03 13:00:56 Machine 20. Windup speed out of range
1993-11-03 14:45:02 Machine 7. Traverse speed out of range
Alt-F1 = Display Next Help Message (supervisors to log on first)

Appendix D

```
*
************************************************************
****
* File : NSM.CFG
* Desc : Configuration file for NSM (SANS)
* Last Revision : 1993-05-03 by JHB
* Revision History :
* 1.00 : Initial release
*
* NOTE !
* 1. The format of this file has to be strictly adhered to.
*    It is essential that the sequence in which items are
*    defined are never changed.
* 2. Comments may be added at any point in this file.
*    Comment lines always start with an '*'. The last line
*    in this file must be a comment line.
* 3. Data lines do not begin with a comment (*). The
*    important part of a data line always appear behind the
*    ':' character. No spaces are allowed between the ':'
*    and the first data character. You may change the
*    description of a data line if you wish.
*
```

```
**********************************************************
****
*
Path for Database Configuration File              :NSM.DBF
Path for Data/History Files                       :\TEMP\
No of Records in Summary/History file             :512
No of Records in Printer Event History file       :1000
Time Interval for Backing up Dynamic data (min)   :19
*
* Enter screen attributes here. For a description
* of attributes see your IBM PC Manual. Attributes are
* entered in hex, without any $ or h post or prefixes.
*
* light grey on black
Background screen attribute                :07
* cyan on black
Dynamic data (normal) attribute            :03
* black on cyan
Edit/Modify data attribute                 :30
* magenta on black
Item in Comms Failure Attribute            :05
* white on red, blinking
Item in Alarm Attribute                    :CF
*
* Masks for data fields eg:
* # = numeric and alpha field, numeric char
* & = alpha field, any char
```

```
* @ = alpha filed, alpha char
* > = alpha field, alpha char converted to uppercase
* < = alpha field, alpha char converted to lowercase
Product name mask (max 20 chars)
:&&&&&&&&&&&&&&&&&&&&
Ratio setpoint/deviation mask          :###.###
* Note : The above mask may seem to large, but it helps to
* erase the 'OFF SCAN' which appears on the summary screen.
Speed setpoint/deviation mask          :####.#
Actual speeds mask                     :####
*
Screen Saver Time (minutes, 0 = disable):3
*
* Printer port parameters
* Port no : 1 = LPT1 etc (0 = disable)
Printer port number            :1
Printer buffer size (bytes)    :4096
* Time out, 0 = disable
Port timeout (1/100 sec)       :400
No of CrLfs to append to line  :0
* Printer Control Commands
* ESC = \e, Max length = 8 chars, nothing = EPSON defaults
Condensed Mode Command Sequence:\eM
Normal Mode Command Sequence   :\eP
*
* Hardware parameters
Board base address of Dig I/O card (hex)    :778
* Note : Port A is used to multiplex the machines,
```

```
* while Port B is used to drive the Watchdog and
* the light beacon.
* For dig I/O card use line no's 0 to 7
Dig I/O card line no. of watchdog output     :6
Watchdog output toggle interval (1/100 sec) :50
Dig I/O card line no. of light beacon        :7
Mux settling time (1/100 sec)                :1000
*
* STATUS Panelmeter addresses
* Note : This is also the order in which these items are
* retrieved
Cross-shaft speed panelmeter address         :01
Windup speed panelmeter address              :02
Traverse speed panelmeter address            :03
*
* Software parameters
'Scan lock' timeout period (min, 0 = indefinite) :2
Size of 'unacknowledged alarms' buffer           :5
* The next parameter sets the time interval between typing
* the space bar, which silences the siren, and starting the
* siren again IF all alarms are not acknowledged. A value
* of 0 disables this option, i.e. the siren will not be
* re-triggered.
Restart siren on old unack. alarms (min)     :2
```

```
*
* Port parameters
Port Number (1-4)       :2
IRQ (2-5, 0 =deflt)     :0
Address (hex, 0=deflt) :0000
Baudrate (1200-9600)    :9600
No of Data Bits (7-8)   :8
No of Stop Bits (1-2)   :1
Parity (O,E,N)          :N
Use XON/XOFF (Y,N)      :N
Use CTS (Y,N)           :N
* 0 = disable time out
Time out (1/100 sec)    :170
No of Retries           :3
*
* End of NSM.Cfg
*
```

Appendix E

```
*
*************************************************************
****
* File : NSM.DBF
* Desc : Configuration file for NSM (SANS)
* Last Revision : 1993-04-05 by JHB
* Rev History :
* 1.00 : Initial release
*
* NOTE !
* 1. The format of this file has to be strictly adhered to.
*    It is essential that the sequence in which items are
*    defined are never changed.
* 2. Comments may be added at any point in this file.
*    Comment lines always start with an '*'
* 3. Data lines do not begin with a comment (*). The
*    important part of a data line always appear behind the
*    ':' character. No spaces are allowed between the ':'
*    and the first data character. You may change the
*    description of a data line if you wish.
*
*************************************************************
****
*
```

No of Machines :20

*

* Machine No 1

Machine Number :1

Mux Address :00

Cross-shaft speed default setpoint :600

Cross-shaft speed default deviation :10

Windup speed default setpoint :600

Windup speed default deviation :10

Traverse speed default setpoint :600

Traverse speed default deviation :10

Ratio default setpoint :1.00

Ratio default deviation :0.10

* Size of 1 history record = 33 BYTES

No of records in history data file :20000

Update interval of history data file (min) :1

*

* Machine No 2

Machine Number :2

Mux Address :01

Cross-shaft speed default setpoint :600

Cross-shaft speed default deviation :10

Windup speed default setpoint :600

Windup speed default deviation :10

Traverse speed default setpoint :600

Traverse speed default deviation :10

Ratio default setpoint :1.00

Ratio default deviation :0.10

* Size of 1 history record = 33 BYTES

No of records in history data file :20000

Update interval of history data file (min) :1

*

* Machine No 3

Machine Number :3

Mux Address :02

Cross-shaft speed default setpoint :600

Cross-shaft speed default deviation :10

Windup speed default setpoint :600

Windup speed default deviation :10

Traverse speed default setpoint :600

Traverse speed default deviation :10

Ratio default setpoint :1.00

Ratio default deviation :0.10

* Size of 1 history record = 33 BYTES

No of records in history data file :20000

Update interval of history data file (min) :1

*

* Machine No 4

Machine Number :4

Mux Address :03

Cross-shaft speed default setpoint :600

Cross-shaft speed default deviation :10

Windup speed default setpoint :600

Windup speed default deviation :10

Traverse speed default setpoint :600

Traverse speed default deviation :10

Ratio default setpoint :1.00

Ratio default deviation :0.10

* Size of 1 history record = 33 BYTES

No of records in history data file :20000

Update interval of history data file (min) :1

*

* Machine No 5

Machine Number :5

Mux Address :04

Cross-shaft speed default setpoint :600

Cross-shaft speed default deviation :10

Windup speed default setpoint :600

Windup speed default deviation :10

Traverse speed default setpoint :600

Traverse speed default deviation :10

Ratio default setpoint :1.00

Ratio default deviation :0.10

* Size of 1 history record = 33 BYTES

No of records in history data file :20000

Update interval of history data file (min) :1

*

* Machine No 6

Machine Number :6

Mux Address :05

Cross-shaft speed default setpoint :600

Cross-shaft speed default deviation :10

Windup speed default setpoint :600

Windup speed default deviation :10

Traverse speed default setpoint :600

Traverse speed default deviation :10

Ratio default setpoint :1.00

Ratio default deviation :0.10

* Size of 1 history record = 33 BYTES

No of records in history data file :20000

Update interval of history data file (min) :1

*

* Machine No 7

Machine Number :7

Mux Address :06

Cross-shaft speed default setpoint :600

Cross-shaft speed default deviation :10

Windup speed default setpoint :600

Windup speed default deviation :10

Traverse speed default setpoint :600

Traverse speed default deviation :10

Ratio default setpoint :1.00

Ratio default deviation :0.10

* Size of 1 history record = 33 BYTES

No of records in history data file :20000

Update interval of history data file (min) :1

*

* Machine No 8

Machine Number :8

Mux Address :07

Cross-shaft speed default setpoint :600

Cross-shaft speed default deviation :10

Windup speed default setpoint :600

Windup speed default deviation :10

Traverse speed default setpoint :600

Traverse speed default deviation :10

Ratio default setpoint :1.00

Ratio default deviation :0.10

* Size of 1 history record = 33 BYTES

No of records in history data file :20000

Update interval of history data file (min) :1

*

* Machine No 9

Machine Number :9

Mux Address :08

Cross-shaft speed default setpoint :600

Cross-shaft speed default deviation :10

Windup speed default setpoint :600

Windup speed default deviation :10

Traverse speed default setpoint :600

Traverse speed default deviation :10

Ratio default setpoint :1.00

Ratio default deviation :0.10

* Size of 1 history record = 33 BYTES

No of records in history data file :20000

Update interval of history data file (min) :1

```
*
* Machine No 10
Machine Number :10
Mux Address    :09
Cross-shaft speed default setpoint          :600
Cross-shaft speed default deviation         :10
Windup speed default setpoint               :600
Windup speed default deviation              :10
Traverse speed default setpoint             :600
Traverse speed default deviation            :10
Ratio default setpoint                      :1.00
Ratio default deviation                     :0.10
* Size of 1 history record = 33 BYTES
No of records in history data file          :20000
Update interval of history data file (min) :1
*
* Machine No 11
Machine Number :11
Mux Address    :10
Cross-shaft speed default setpoint          :600
Cross-shaft speed default deviation         :10
Windup speed default setpoint               :600
Windup speed default deviation              :10
Traverse speed default setpoint             :600
Traverse speed default deviation            :10
Ratio default setpoint                      :1.00
Ratio default deviation                     :0.10
```

* Size of 1 history record = 33 BYTES

No of records in history data file :20000

Update interval of history data file (min) :1

*

* Machine No 12

Machine Number :12

Mux Address :11

Cross-shaft speed default setpoint :600

Cross-shaft speed default deviation :10

Windup speed default setpoint :600

Windup speed default deviation :10

Traverse speed default setpoint :600

Traverse speed default deviation :10

Ratio default setpoint :1.00

Ratio default deviation :0.10

* Size of 1 history record = 33 BYTES

No of records in history data file :20000

Update interval of history data file (min) :1

*

* Machine No 13

Machine Number :13

Mux Address :12

Cross-shaft speed default setpoint :600

Cross-shaft speed default deviation :10

Windup speed default setpoint :600

Windup speed default deviation :10

Traverse speed default setpoint :600

Traverse speed default deviation :10

Ratio default setpoint :1.00

Ratio default deviation :0.10

* Size of 1 history record = 33 BYTES

No of records in history data file :20000

Update interval of history data file (min) :1

*

* Machine No 14

Machine Number :14

Mux Address :13

Cross-shaft speed default setpoint :600

Cross-shaft speed default deviation :10

Windup speed default setpoint :600

Windup speed default deviation :10

Traverse speed default setpoint :600

Traverse speed default deviation :10

Ratio default setpoint :1.00

Ratio default deviation :0.10

* Size of 1 history record = 33 BYTES

No of records in history data file :20000

Update interval of history data file (min) :1

*

* Machine No 15

Machine Number :15

Mux Address :14

Cross-shaft speed default setpoint :600

Cross-shaft speed default deviation :10

Windup speed default setpoint :600

Windup speed default deviation :10

Traverse speed default setpoint :600

Traverse speed default deviation :10

Ratio default setpoint :1.00

Ratio default deviation :0.10

* Size of 1 history record = 33 BYTES

No of records in history data file :20000

Update interval of history data file (min) :1

*

* Machine No 16

Machine Number :16

Mux Address :15

Cross-shaft speed default setpoint :600

Cross-shaft speed default deviation :10

Windup speed default setpoint :600

Windup speed default deviation :10

Traverse speed default setpoint :600

Traverse speed default deviation :10

Ratio default setpoint :1.00

Ratio default deviation :0.10

* Size of 1 history record = 33 BYTES

No of records in history data file :20000

Update interval of history data file (min) :1

*

* Machine No 17

Machine Number :17

Mux Address :16

Cross-shaft speed default setpoint :600

Cross-shaft speed default deviation :10

Windup speed default setpoint :600

Windup speed default deviation :10

Traverse speed default setpoint :600

Traverse speed default deviation :10

Ratio default setpoint :1.00

Ratio default deviation :0.10

* Size of 1 history record = 33 BYTES

No of records in history data file :20000

Update interval of history data file (min) :1

*

* Machine No 18

Machine Number :18

Mux Address :17

Cross-shaft speed default setpoint :600

Cross-shaft speed default deviation :10

Windup speed default setpoint :600

Windup speed default deviation :10

Traverse speed default setpoint :600

Traverse speed default deviation :10

Ratio default setpoint :1.00

Ratio default deviation :0.10

* Size of 1 history record = 33 BYTES

No of records in history data file :20000

Update interval of history data file (min) :1

*

* Machine No 19

Machine Number :19

Mux Address :18

Cross-shaft speed default setpoint :600

Cross-shaft speed default deviation :10

Windup speed default setpoint :600

Windup speed default deviation :10

Traverse speed default setpoint :600

Traverse speed default deviation :10

Ratio default setpoint :1.00

Ratio default deviation :0.10

* Size of 1 history record = 33 BYTES

No of records in history data file :20000

Update interval of history data file (min) :1

*

* Machine No 20

Machine Number :20

Mux Address :19

Cross-shaft speed default setpoint :600

Cross-shaft speed default deviation :10

Windup speed default setpoint :600

Windup speed default deviation :10

Traverse speed default setpoint :600

Traverse speed default deviation :10

Ratio default setpoint :1.00

Ratio default deviation :0.10

```
* Size of 1 history record = 33 BYTES
No of records in history data file          :20000
Update interval of history data file (min) :1
*
* End of Sans.Dbf
*
```

Appendix F

```
*
*******************************************************
* File : NS.BAT
* Desc : Batch file for NSM (SANS)
*
*******************************************************
*

nsm nsm.cfg nsm.dbf
```

Appendix G

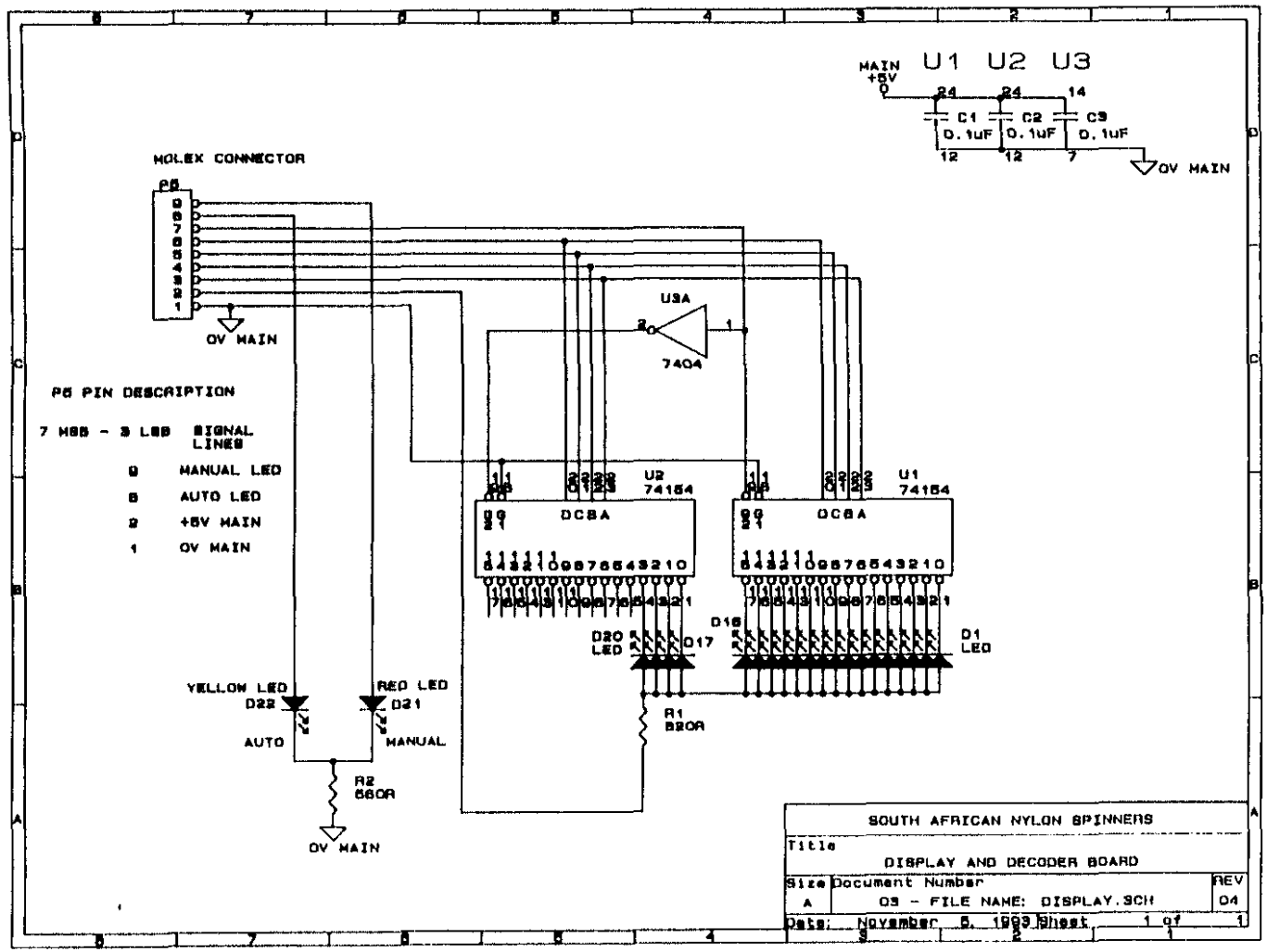

MAIN +5V
U1 U2 U3
C1 0.1uF
C2 0.1uF
C3 0.1uF
0V MAIN
MOLEX CONNECTOR
P5
0V MAIN
U3A
7404
P5 PIN DESCRIPTION
7 MSB - 3 LSB SIGNAL LINES
9 MANUAL LED
8 AUTO LED
2 +5V MAIN
1 0V MAIN
U2 74154
U1 74154
DCBA
D20 LED
D17
D16
D1 LED
R1 820R
YELLOW LED D22
RED LED D21
AUTO
MANUAL
R2 560R
0V MAIN
SOUTH AFRICAN NYLON SPINNERS
Title
DISPLAY AND DECODER BOARD
Size A
Document Number
03 - FILE NAME: DISPLAY.SCH
REV 04
Date: November 5, 1993 Sheet 1 of 1

Appendix H

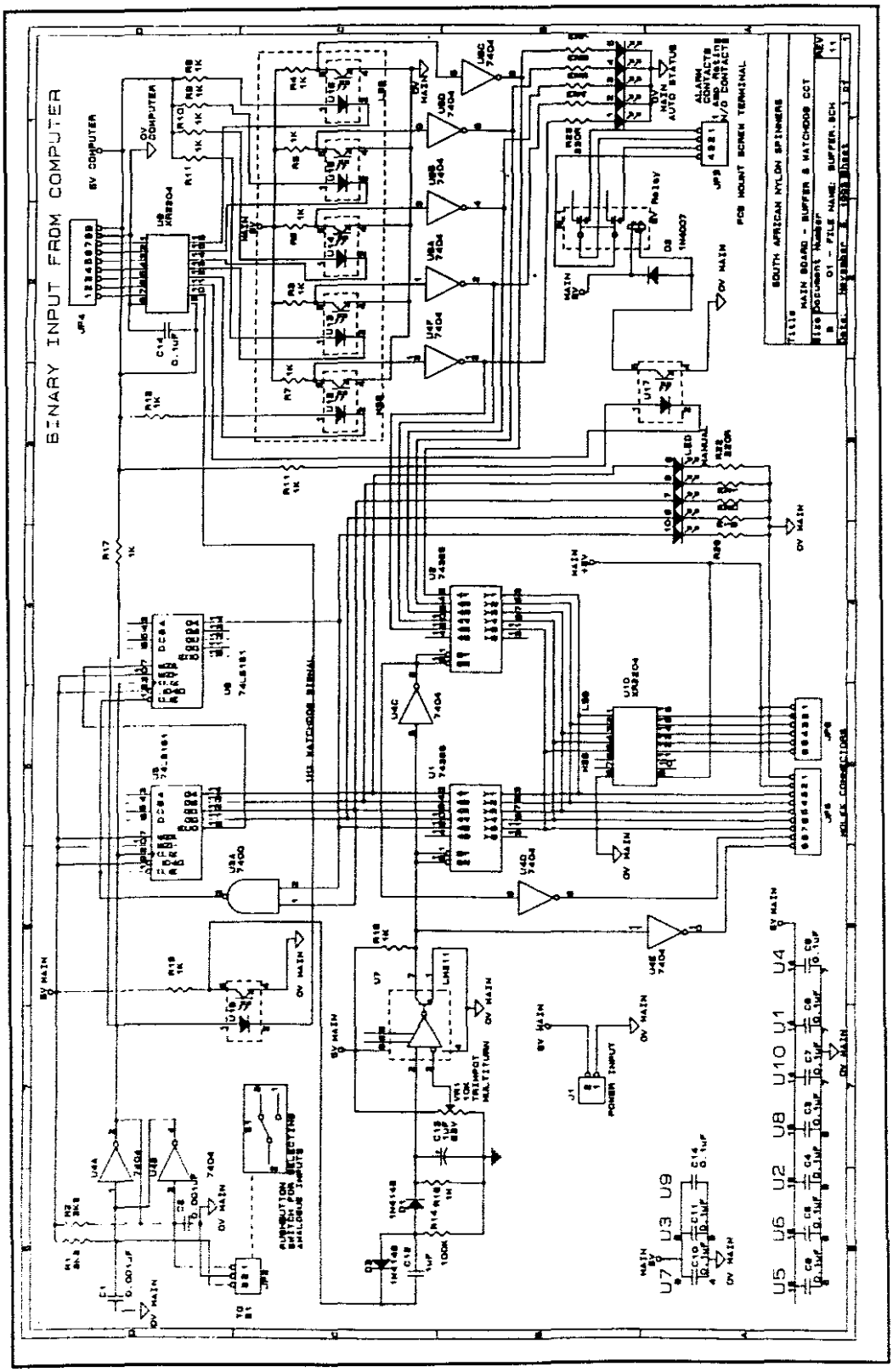
BINARY INPUT FROM COMPUTER
SOUTH AFRICAN NYLON SPINNERS
MAIN BOARD - BUFFER & MATCHDOG CCT
01 - FILE NAME: BUFFER.SCH
PCB MOUNT SCREW TERMINAL
ALARM CONTACTS AND ROTATE I/O CONTACTS
MAIN AUTO STATUS
MOLEX CONNECTORS
POWER INPUT
TRIMPOT MULTITURN
RUBBOUTTON SWITCH FOR SELECTING ANALOGUE INPUTS
U1 U2 U3 U4 U5 U6 U7 U8 U9 U10

Appendix I

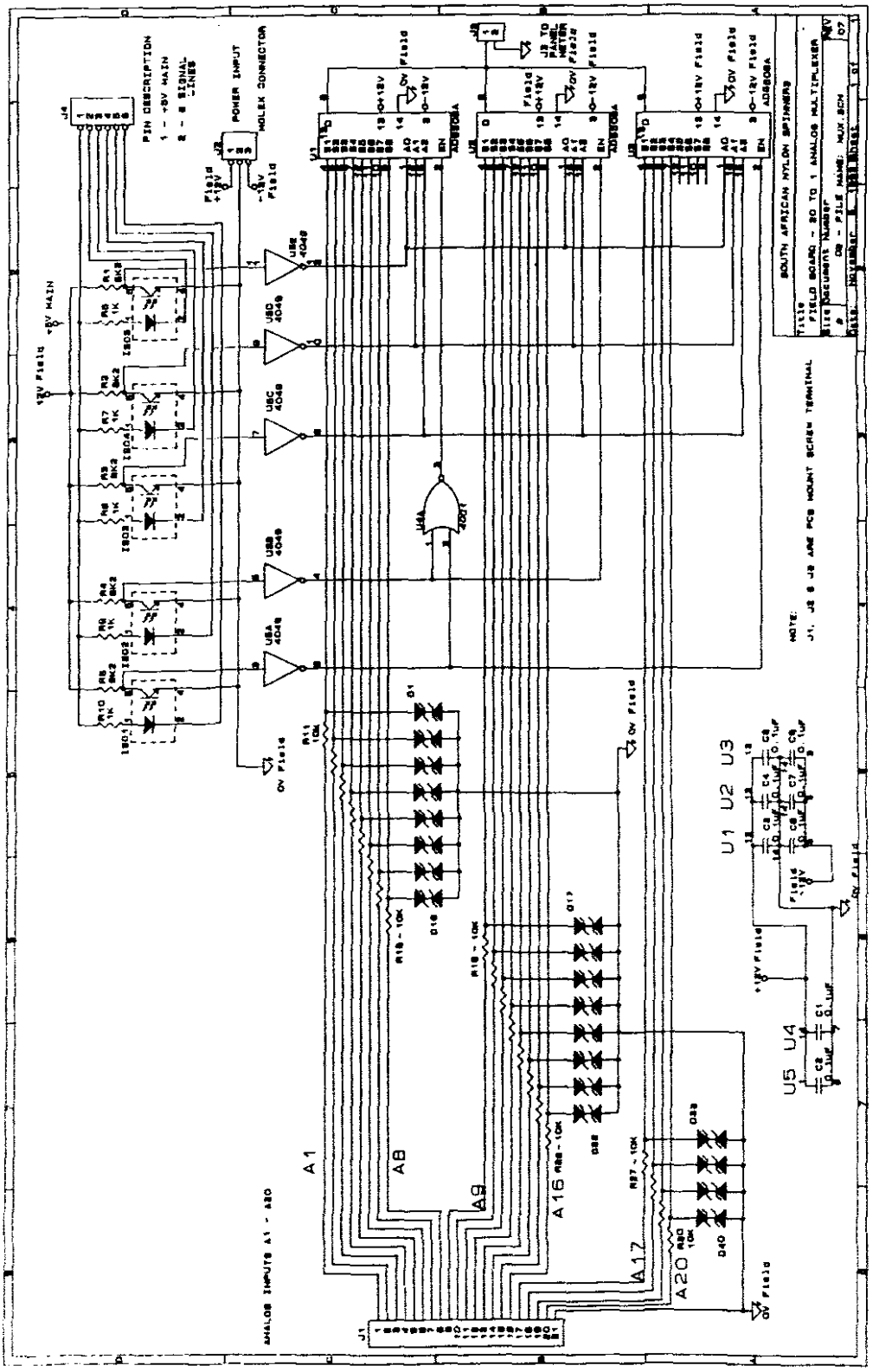

Appendix J

COMPONENT LIST

BUFFER BOARD & WATCHDOG CIRCUIT

RESISTORS (All resistors are ¼W ±10% tolerance, unless otherwise stated)

R1,2,3,4,5	220R (5 off)
R6,7,8,9,10,11,14,15,16,17,18,19,20,23	1K (14 off)
R12,13	3K3 (2 off)
R21	100K
R22	1M
R24,25,26,27,28	330R (5 off)
POT1 (multiturn trimpotentiometer)	10K pot

CAPACITORS

C1,2,3,4,5,6,7,8,9,14	0.1uF non-electrolytic (10 off)
C12,13	0.001uF non-electrolytic (2 off)
C10	1uF non-electrolytic
C11	1uF 63V electrolytic

DIODES

D1,2,3,4,5,6,7,8,9,10	LED 5mm clear red (10 off)
D12,13	1N4148 (2 off)
D11	1N4007

Intergrated Circuit's (IC's)

U1,2	74LS161 (2 off)
U3,4	74365 (2 off)
U5,10	MC1416B **or** XR2204 (2 off)
U6,7	7404 (2 off)
U8	74LS00
U9	LM311
ISO1,2,3,4,5,6,7	4N33 (7 off) opto isolators

MISCELLANEOUS

K1	5V Relay DPDT 1Amp contact ratings
JP1	3-Pin molex connector
JP2,5	9-Pin molex connectors (2 off)
JP3	4-Way PCB Mount Screw Terminal
JP4	6-Pin molex connector
JP6	2-Pin molex connector
S1	Pushbutton switch SPDT (industrial type, panel mount)

DISPLAY & DECODER BOARD

RESISTORS (All resistors are ¼W ±10% tolerance, unless otherwise stated)

R1	820R
R2	560R

CAPACITORS

C1,2,3	0.1uF non-electrolytic (3 off)

DIODES

D1,2,3,4,5,6,7,8,9,10, 11,12,13,14,15,16,17,18,19,20,21	LED 5mm red (21 off)
D22	LED 5mm green

IC's

U1,2	74LS154 (2 off)
U3	7404

MISCELLANEOUS

P5	9-Pin molex connector

MULTIPLEXER BOARD (REPEAT X3)

RESISTORS (All resistors are ¼W ±10% tolerance, unless otherwise stated)

R1,2,3,4,5	8K2 (5 off)
R6,7,8,9,10	1K (5 off)
R11,12,13,14,15,16,17,18,19,20, 21,22,23,24,25,26,27,28,29,30	10K ½W (20 off)

CAPACITORS

C1,2,3,4,5,6,7,8 0.1uF non-electrolytic (8 off)

DIODES

D1,2,3,4,5,6,7,8,9,10,11,12,13,14,15,16,17,18,19,20,21, 22,23,24,25,26,27,28,29,30,31,32,33,34,35,36,37,38,39,40 3.3V zener diodes (40 off)

IC's

U1,2,3	ADG508A (3 off) analogue multiplexer
U4	CD4001
U5	CD4049

MISCELLANEOUS

J1	21-Way PCB mount screw terminal
J2	3-Pin molex connector
J3	2-Way PCB mount screw terminal
P4	6-Pin molex connector

Appendix K

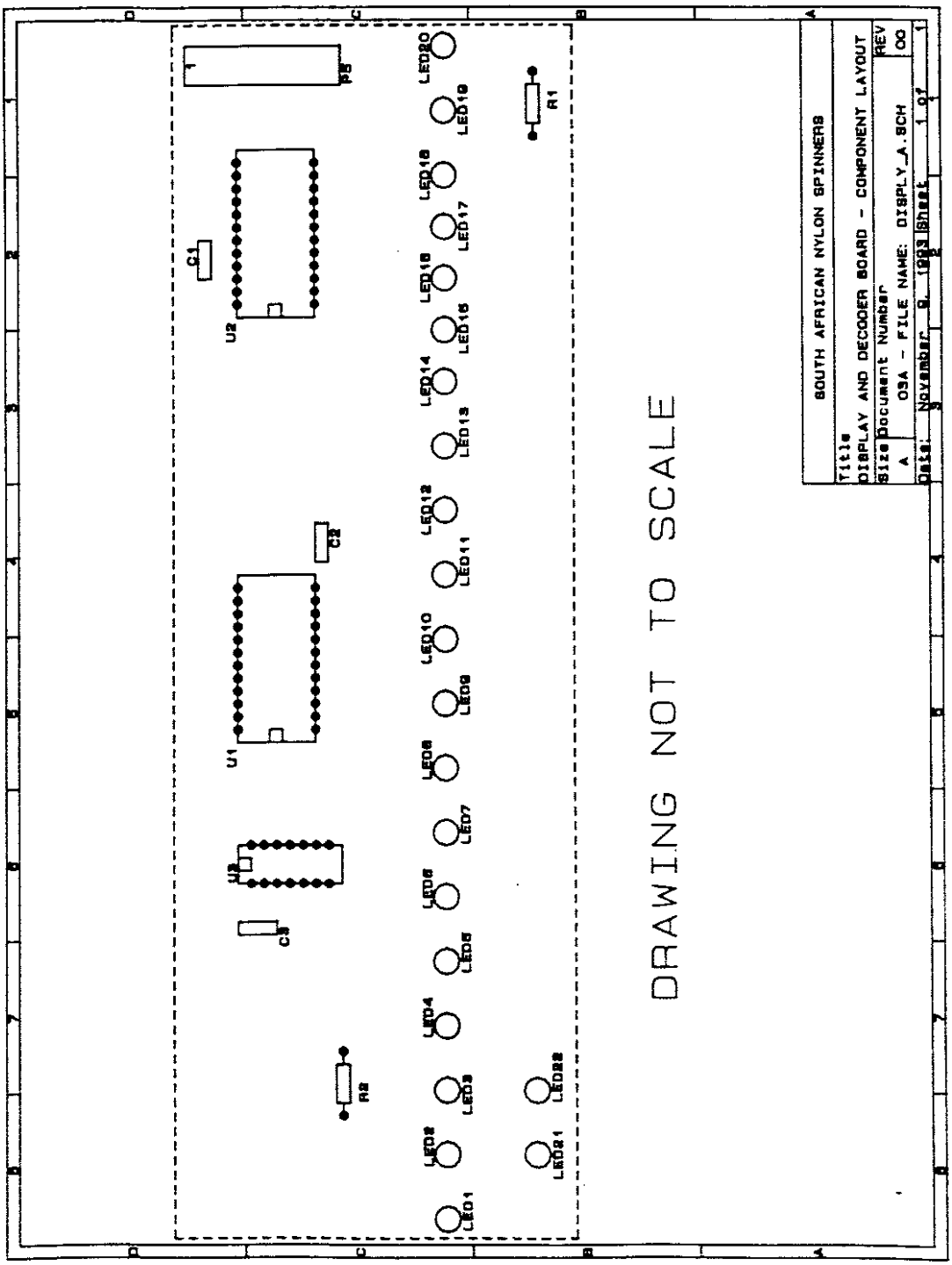
DRAWING NOT TO SCALE
SOUTH AFRICAN NYLON SPINNERS
Title
DISPLAY AND DECODER BOARD - COMPONENT LAYOUT
Size
A
Document Number
DSA - FILE NAME: DISPLY_A.SCH
REV
00
Date: November 9, 1993
Sheet 1 of 1
U1
U2
U3
C1
C2
C3
R1
R2
LED1
LED2
LED3
LED4
LED5
LED6
LED7
LED8
LED9
LED10
LED11
LED12
LED13
LED14
LED15
LED16
LED17
LED18
LED19
LED20
LED21
LED22

Appendix L

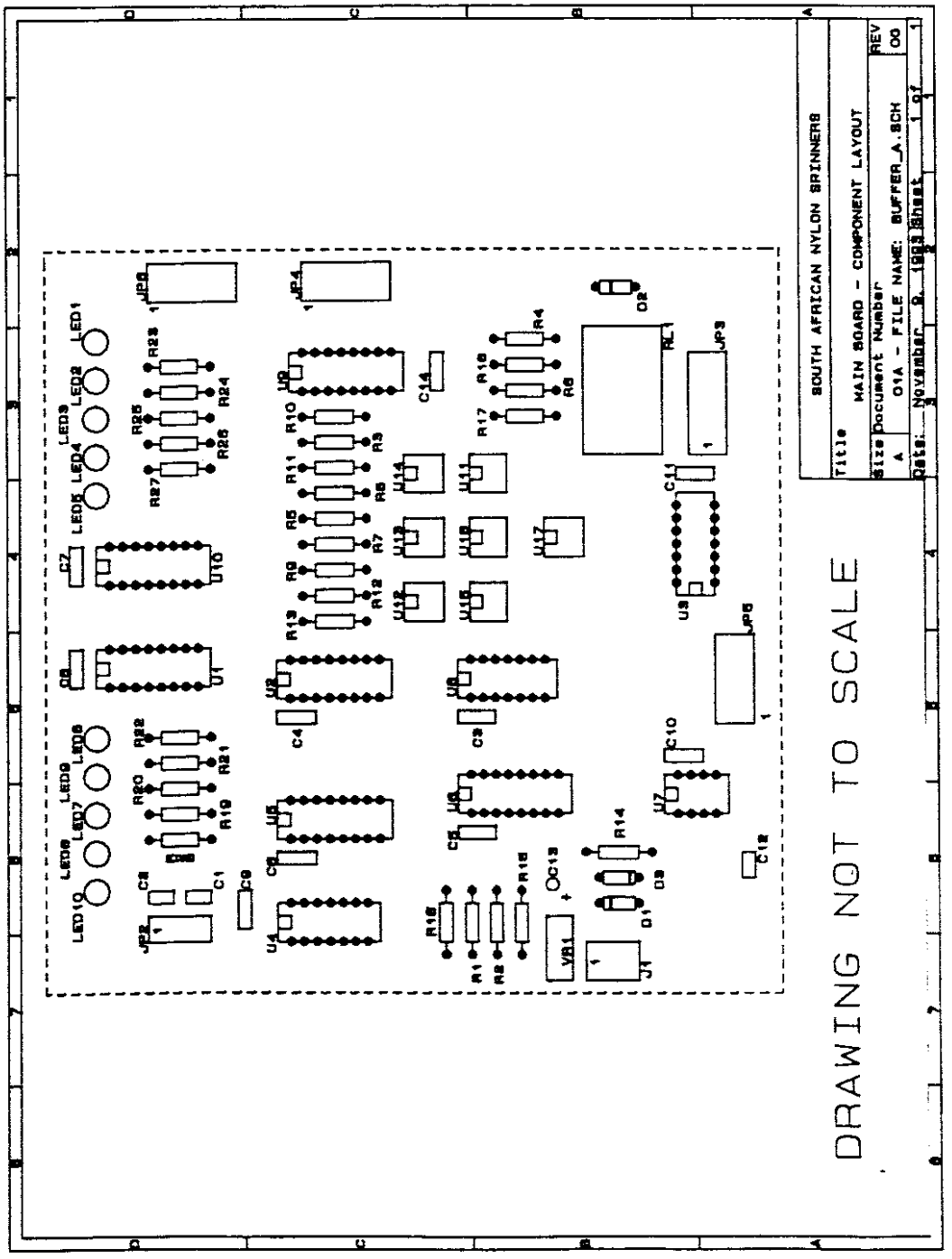
SOUTH AFRICAN NYLON SPINNERS
Title
MAIN BOARD - COMPONENT LAYOUT
Size
A
Document Number
01A - FILE NAME: BUFFER_A.SCH
REV
00
Date: November 8, 1993
Sheet 1 of 1
DRAWING NOT TO SCALE

Appendix M

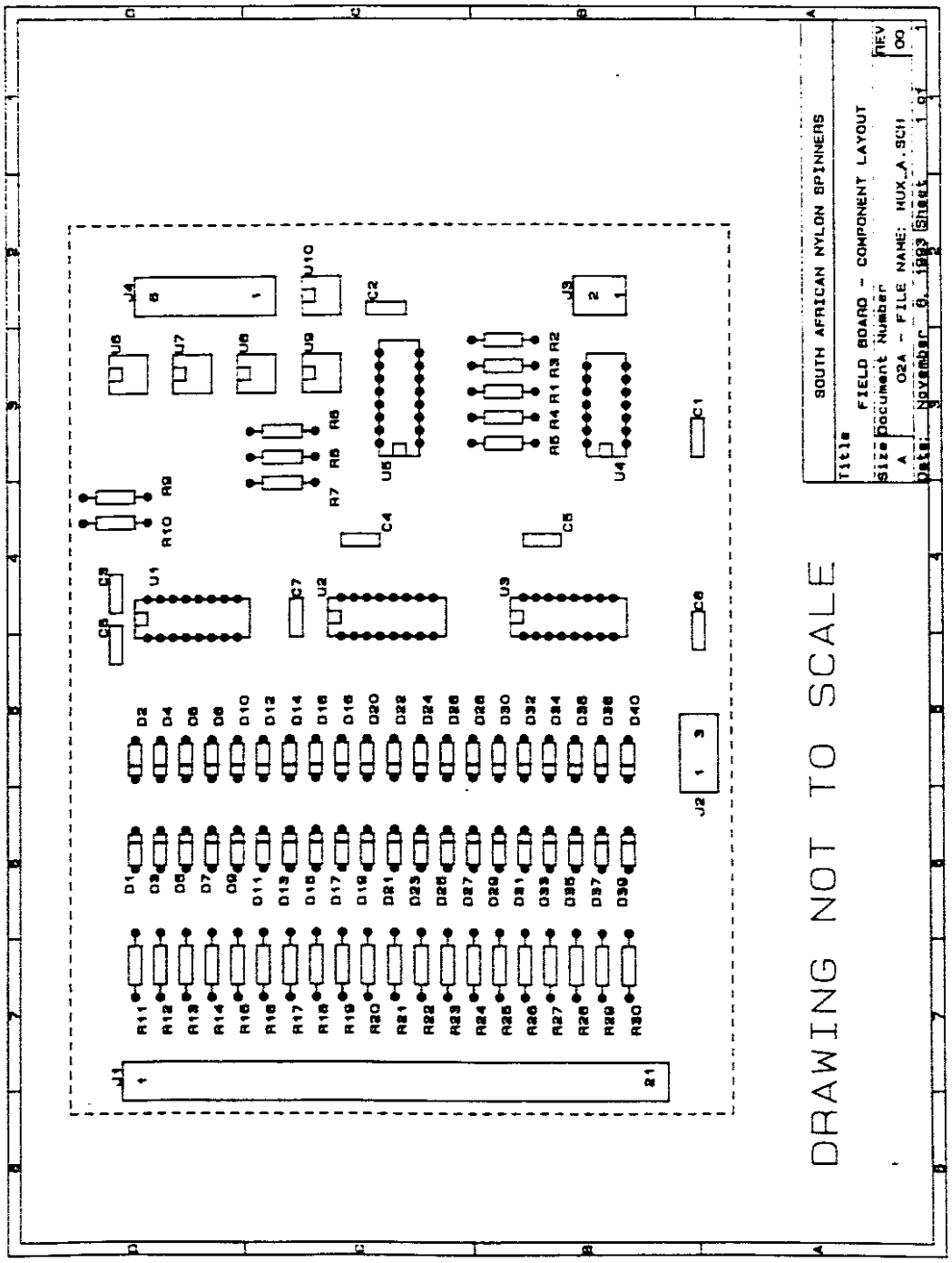
SOUTH AFRICAN NYLON SPINNERS
FIELD BOARD - COMPONENT LAYOUT
Size Document Number REV
A 02A - FILE NAME: HUX_A.SCH 00
Date: November 9, 1993 Sheet 1 of 1
DRAWING NOT TO SCALE

Appendix N

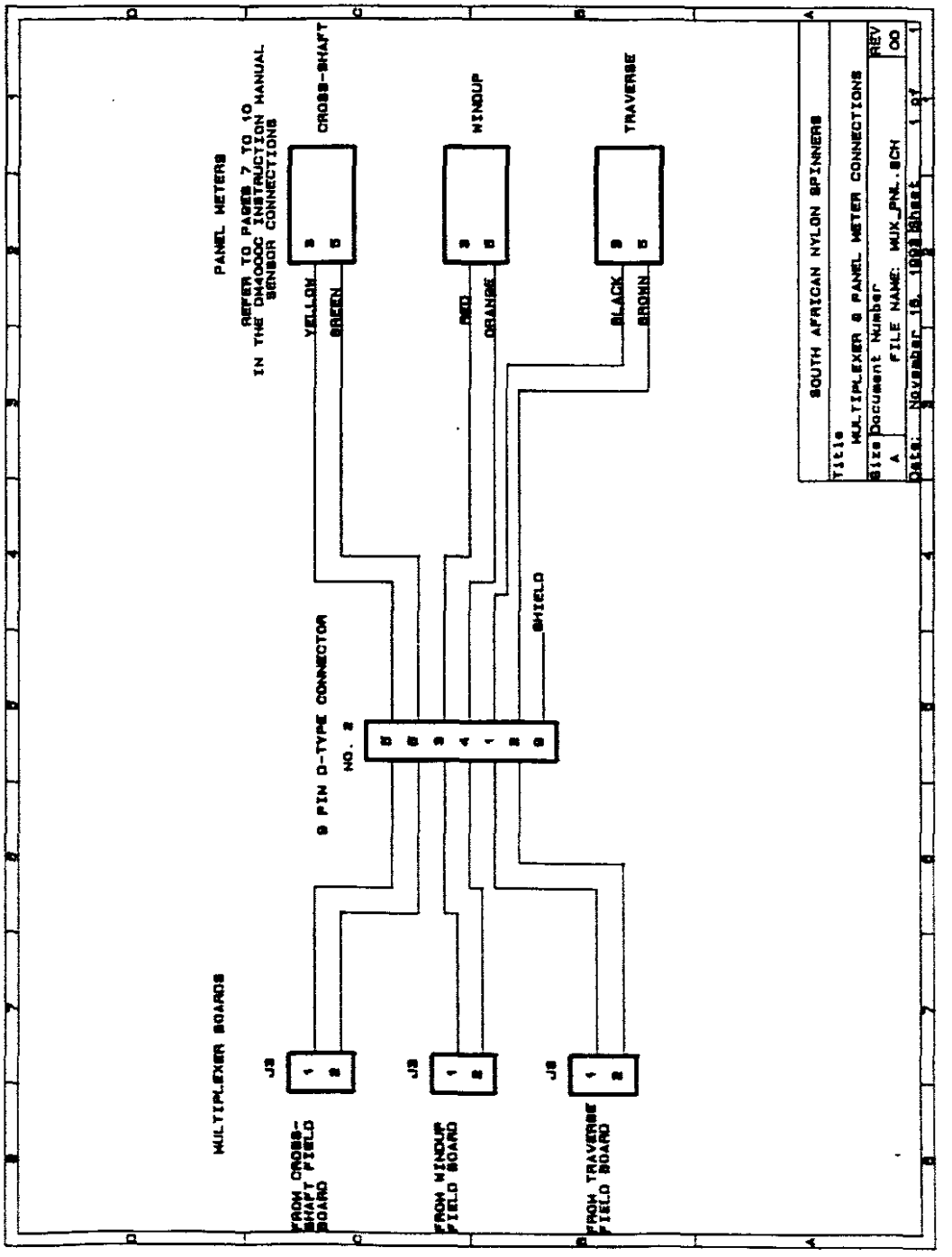
PANEL METERS
REFER TO PAGES 7 TO 10
IN THE DH400DC INSTRUCTION MANUAL
SENSOR CONNECTIONS
CROSS-SHAFT
WINDUP
TRAVERSE
YELLOW
BROWN
RED
ORANGE
BLACK
BROWN
SHIELD
9 PIN D-TYPE CONNECTOR
NO. 2
MULTIPLEXER BOARDS
J3
J3
J3
FROM CROSS-SHAFT FIELD BOARD
FROM WINDUP FIELD BOARD
FROM TRAVERSE FIELD BOARD
SOUTH AFRICAN NYLON SPINNERS
Title
MULTIPLEXER & PANEL METER CONNECTIONS
Size
A
Document Number
FILE NAME: MUX_PNL.SCH
REV
00
Date: November 18, 1993 Sheet 1 of 1

Appendix O

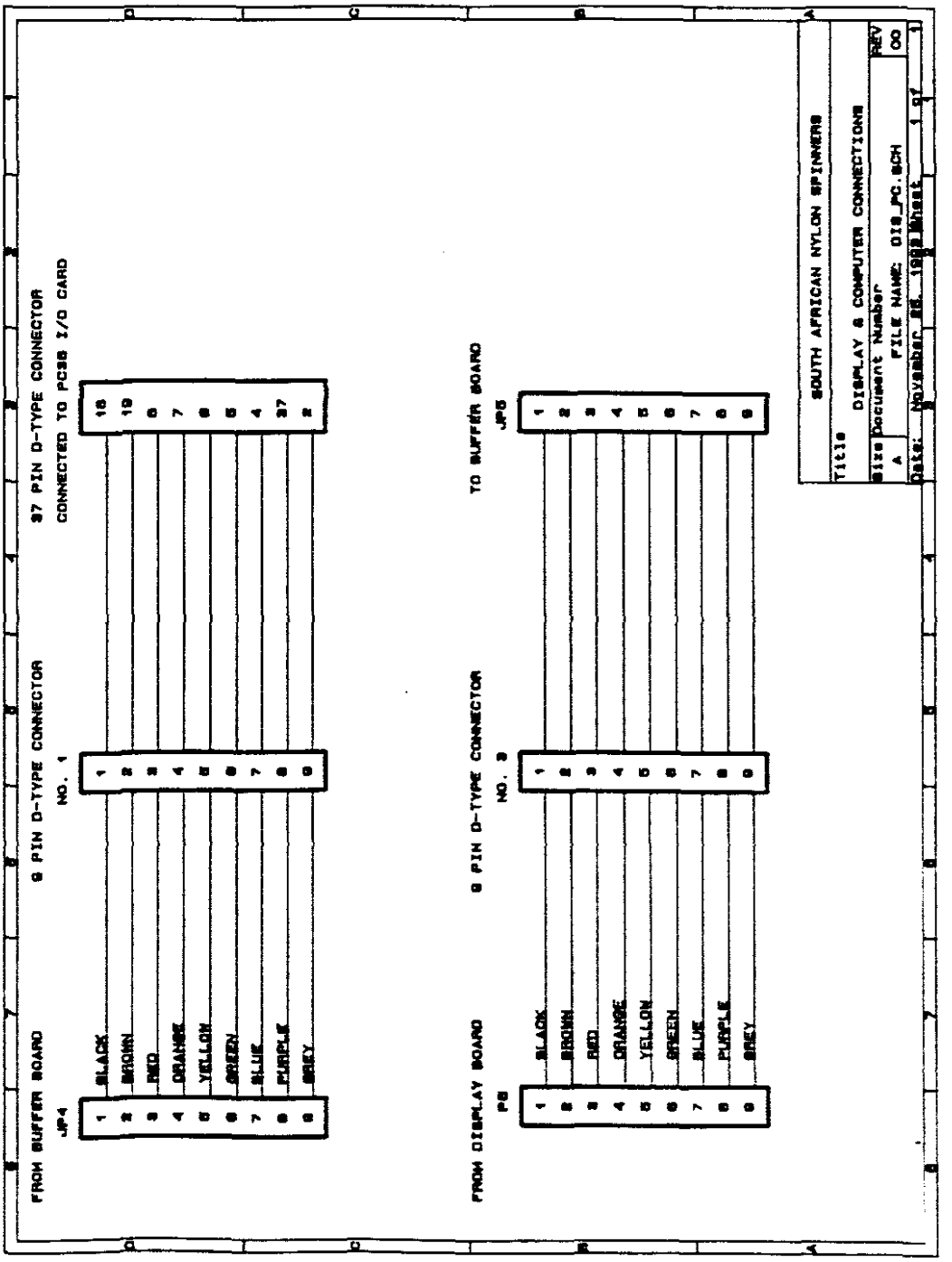
FROM BUFFER BOARD
JP4
9 PIN D-TYPE CONNECTOR
NO. 1
37 PIN D-TYPE CONNECTOR
CONNECTED TO PC88 I/O CARD
BLACK
BROWN
RED
ORANGE
YELLOW
GREEN
BLUE
PURPLE
GREY
FROM DISPLAY BOARD
P8
9 PIN D-TYPE CONNECTOR
NO. 2
TO BUFFER BOARD
JP5
SOUTH AFRICAN NYLON SPINNERS
Title
DISPLAY & COMPUTER CONNECTIONS
Size
A
Document Number
FILE NAME: DIS_PC.SCH
REV
00
Date: November 08, 1991 Sheet 1 of 1

Appendix P

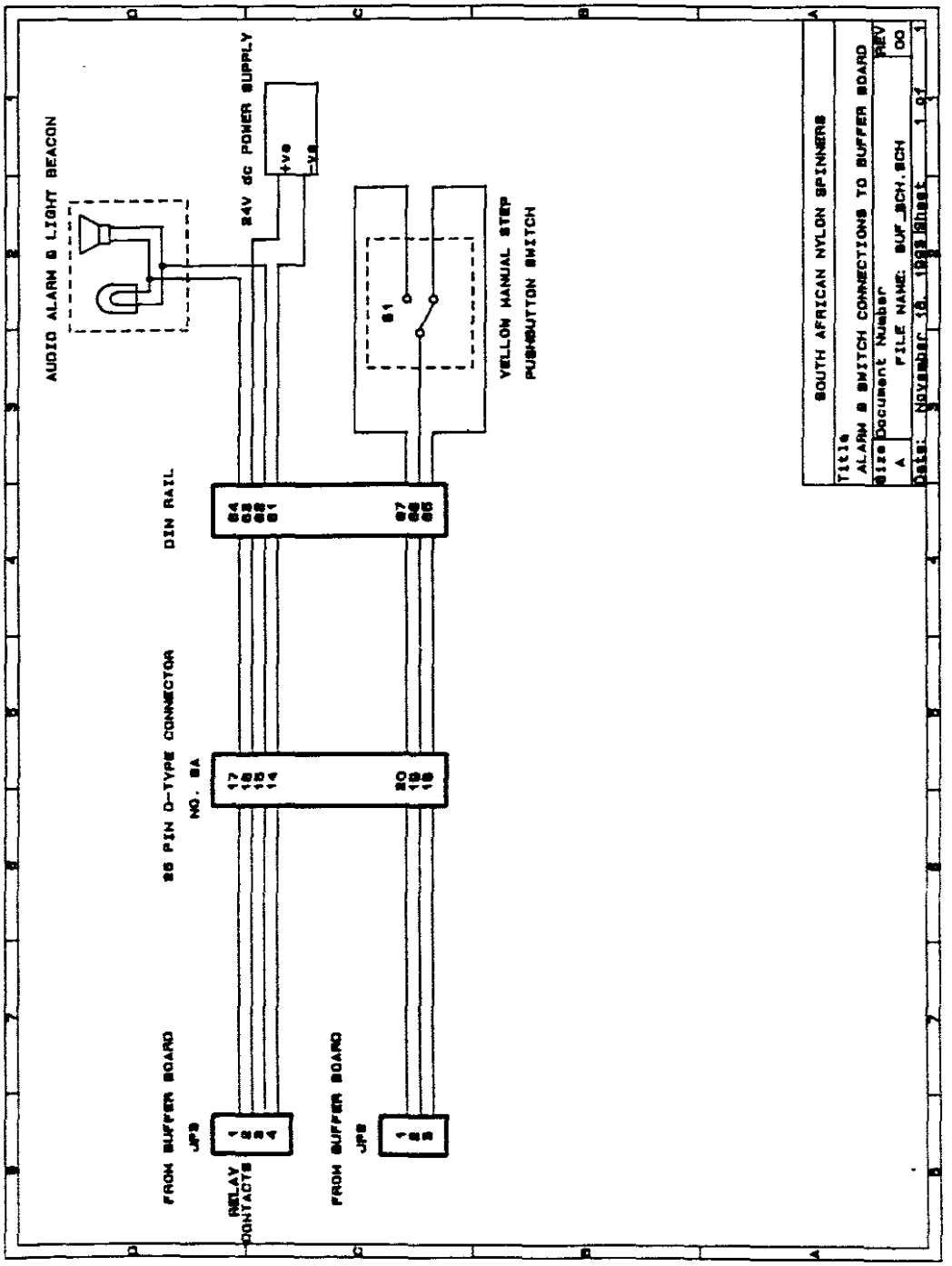
AUDIO ALARM & LIGHT BEACON
24V dc POWER SUPPLY
+Vs
-Vs
S1
YELLOW MANUAL STEP
PUSHBUTTON SWITCH
DIN RAIL
84
83
82
81
87
86
85
25 PIN D-TYPE CONNECTOR
NO. 8A
17
16
15
14
20
19
18
FROM BUFFER BOARD
JP3
1
2
3
4
RELAY
CONTACTS
FROM BUFFER BOARD
JP8
1
2
3
SOUTH AFRICAN NYLON SPINNERS
Title
ALARM & SWITCH CONNECTIONS TO BUFFER BOARD
Size
A
Document Number
FILE NAME: BUF_SCH.SCH
REV
00
Date: November 18, 1993 Sheet 1 of 1

Appendix Q

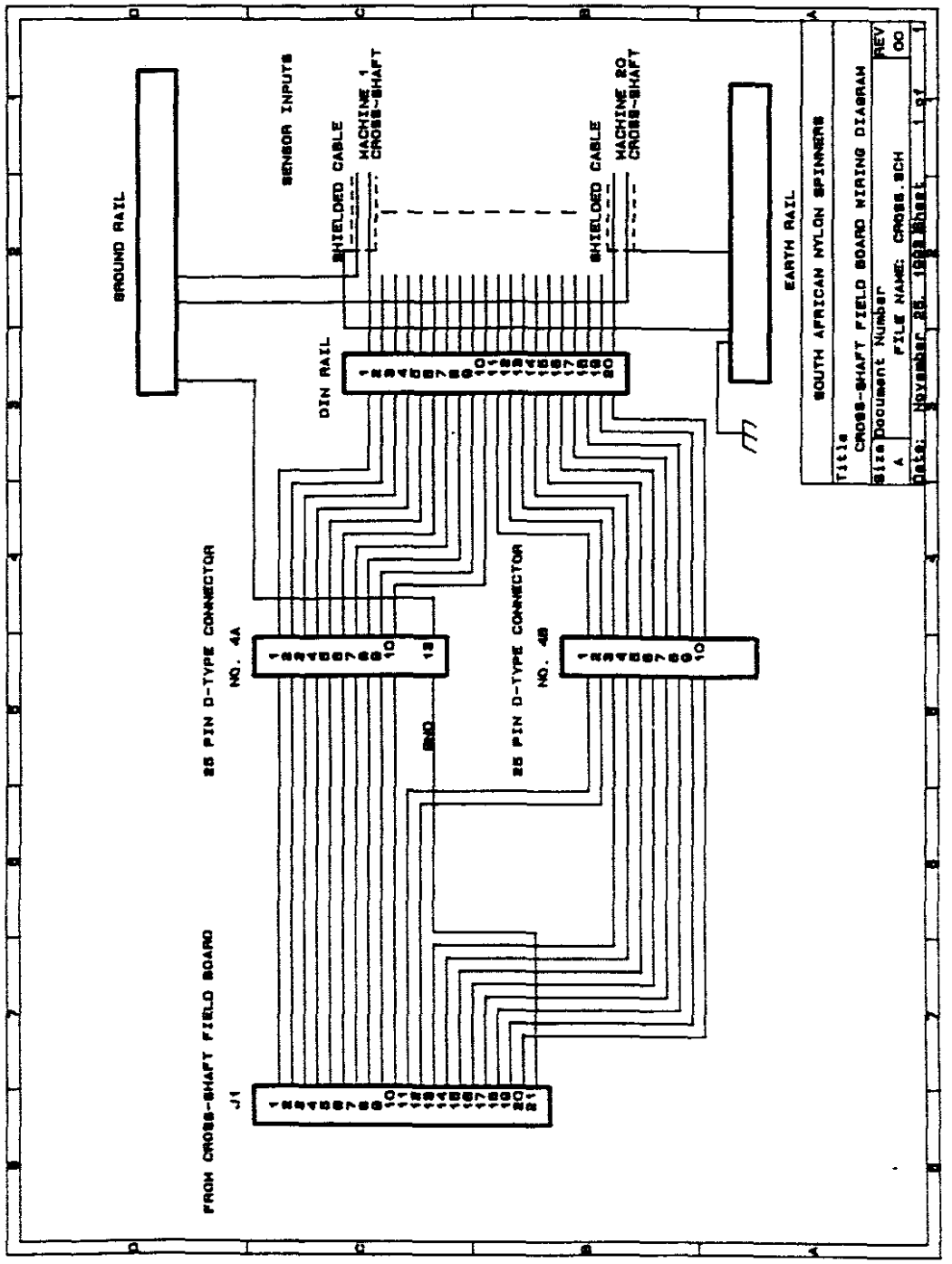
GROUND RAIL
SENSOR INPUTS
SHIELDED CABLE
MACHINE 1 CROSS-SHAFT
SHIELDED CABLE
MACHINE 20 CROSS-SHAFT
EARTH RAIL
DIN RAIL
25 PIN D-TYPE CONNECTOR NO. 4A
25 PIN D-TYPE CONNECTOR NO. 4B
END
FROM CROSS-SHAFT FIELD BOARD J1
SOUTH AFRICAN NYLON SPINNERS
Title
CROSS-SHAFT FIELD BOARD WIRING DIAGRAM
Size
Document Number
REV
00
A
FILE NAME: CROSS.SCH
Date:
November 25, 1992
Sheet 1 of 1

Appendix R

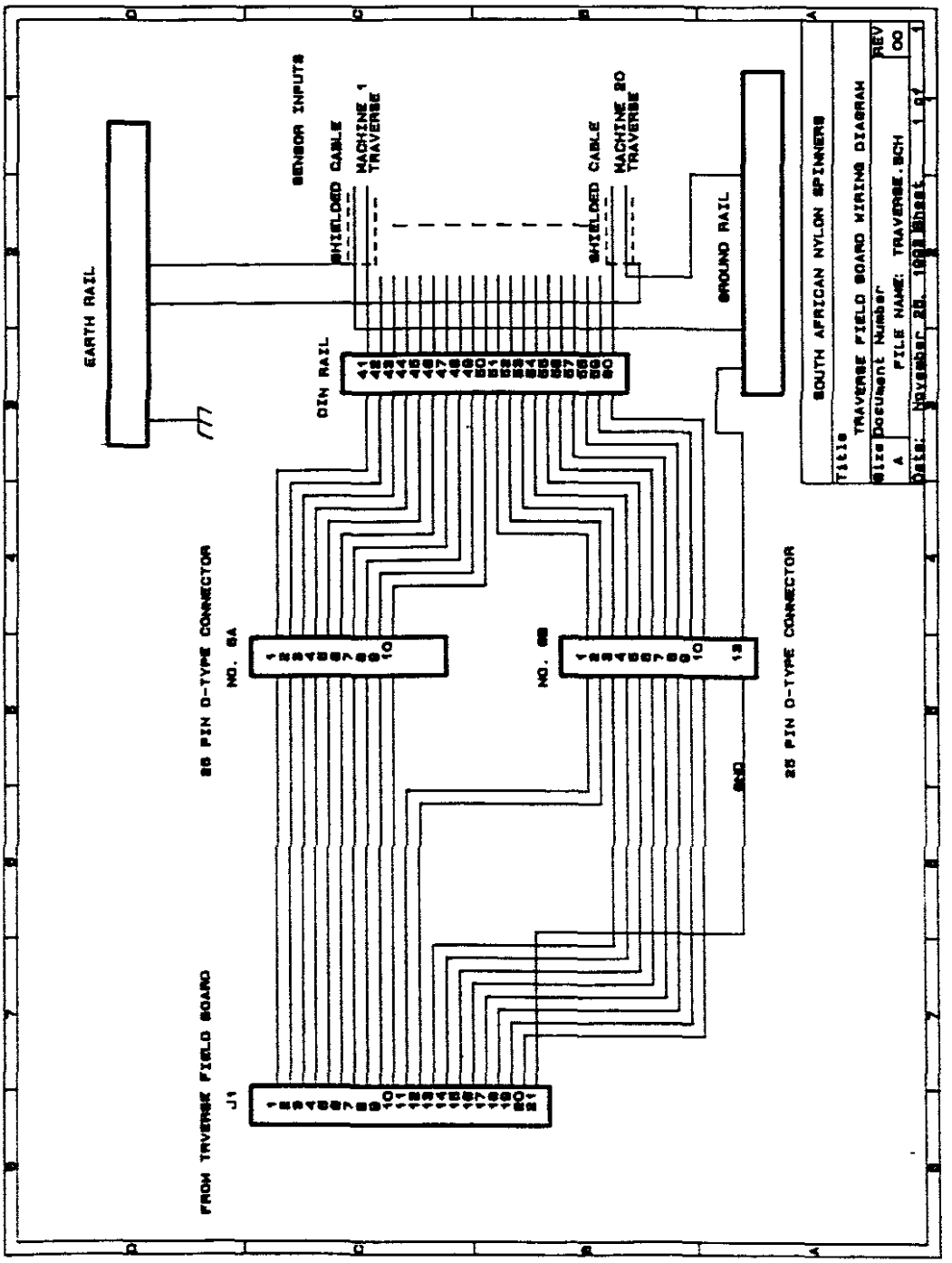
SENSOR INPUTS
SHIELDED CABLE
MACHINE 1 TRAVERSE
SHIELDED CABLE
MACHINE 20 TRAVERSE
EARTH RAIL
GROUND RAIL
DIN RAIL
41 42 43 44 45 46 47 48 49 50 51 52 53 54 55 56 57 58 59 60
25 PIN D-TYPE CONNECTOR
NO. 6A
NO. 6B
25 PIN D-TYPE CONNECTOR
FROM TRAVERSE FIELD BOARD
J1
SOUTH AFRICAN NYLON SPINNERS
Title
TRAVERSE FIELD BOARD WIRING DIAGRAM
Size
A
Document Number
FILE NAME: TRAVERSE.SCH
REV
00
Date:
November 28, 1991
Sheet
1 of 1

Appendix S

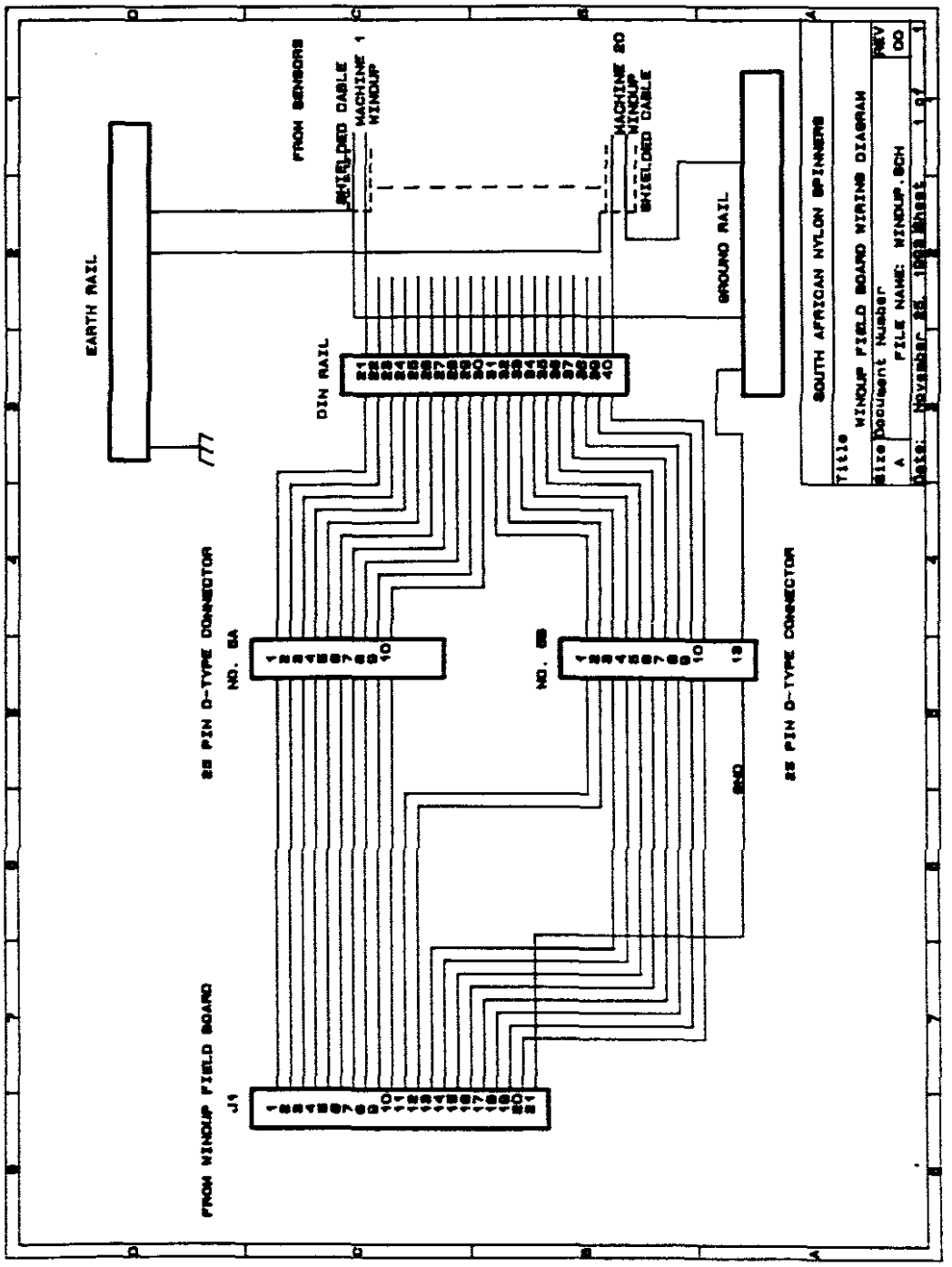
FROM SENSORS
SHIELDED CABLE
MACHINE 1 WINDUP
MACHINE 20 WINDUP SHIELDED CABLE
EARTH RAIL
GROUND RAIL
DIN RAIL
25 PIN D-TYPE CONNECTOR NO. 8A
25 PIN D-TYPE CONNECTOR NO. 8B
FROM WINDUP FIELD BOARD J1
SOUTH AFRICAN NYLON SPINNERS
WINDUP FIELD BOARD WIRING DIAGRAM
Size A
Document Number
REV 00
FILE NAME: WINDUP.SCH
Date: November 25, 1993 Sheet 1 of 1

Appendix T

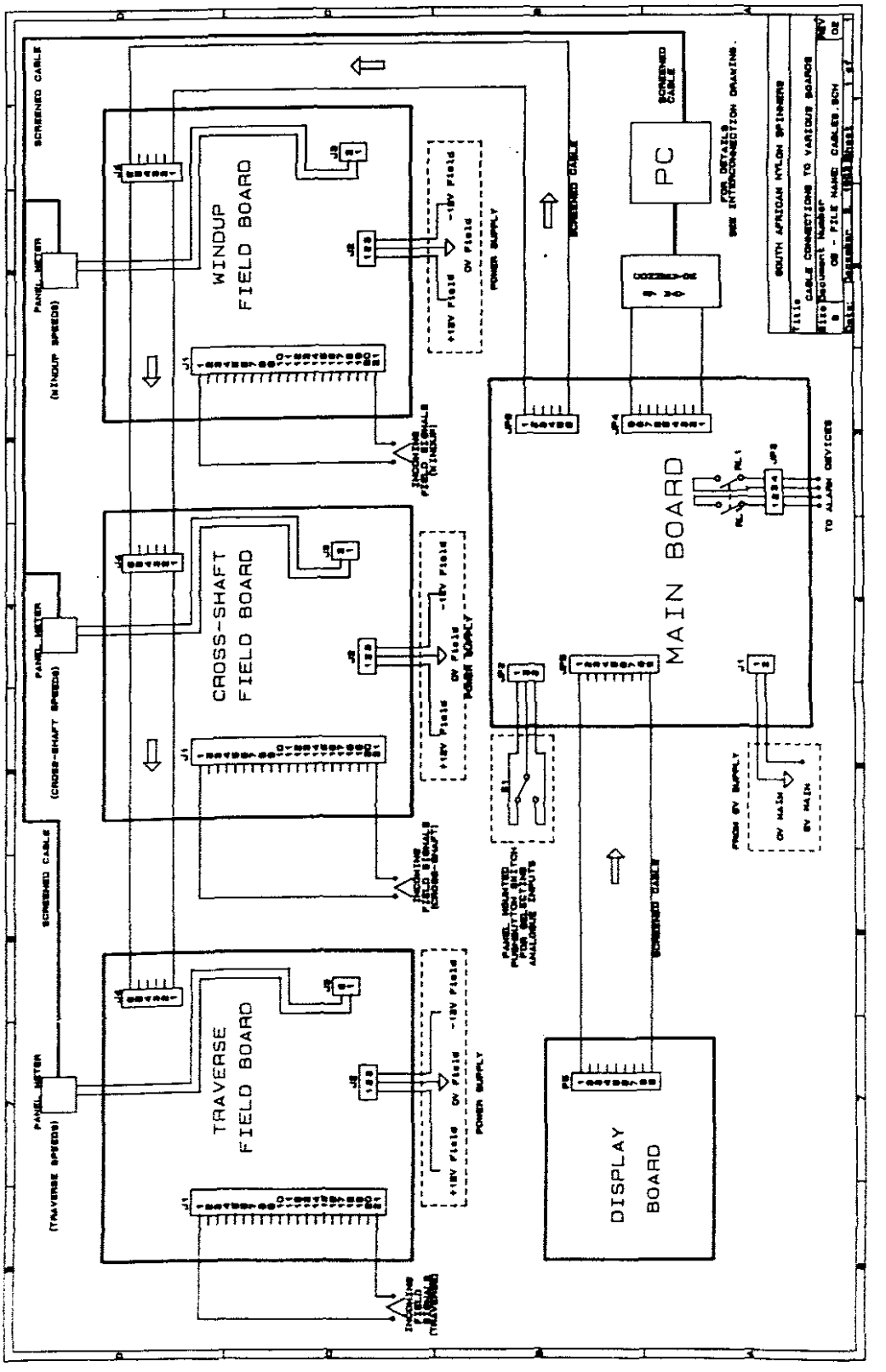
WINDUP
FIELD BOARD
CROSS-SHAFT
FIELD BOARD
TRAVERSE
FIELD BOARD
MAIN BOARD
DISPLAY
BOARD
PC
SCREENED CABLE
PANEL METER
(WINDUP SPEEDS)
(CROSS-SHAFT SPEEDS)
(TRAVERSE SPEEDS)
POWER SUPPLY
+18V Field
0V Field
-18V Field
TO ALARM DEVICES
SOUTH AFRICAN NYLON SPINNERS
CABLE CONNECTIONS TO VARIOUS BOARDS

Appendix U

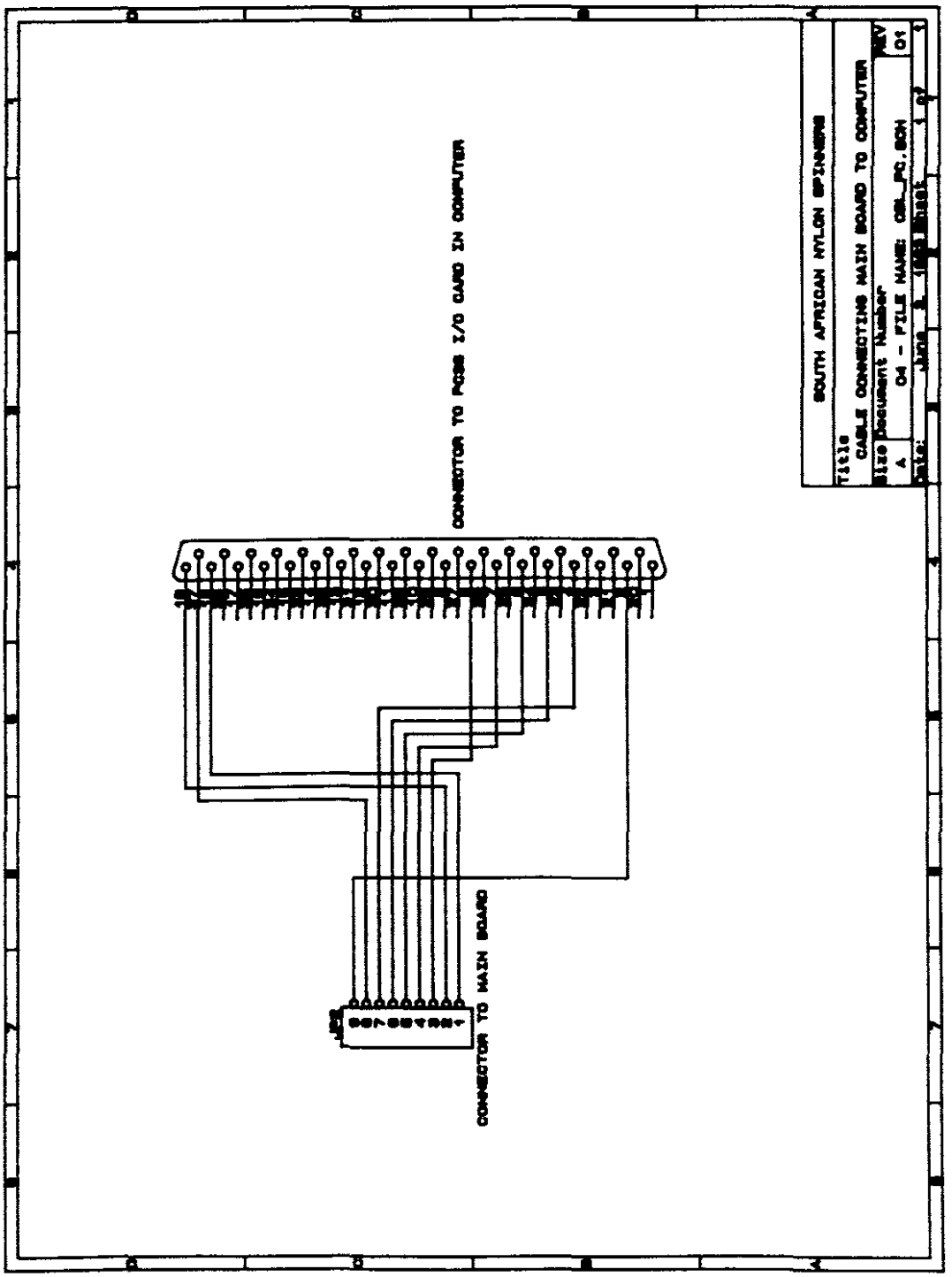
SOUTH AFRICAN NYLON SPINNING
Title
CABLE CONNECTING MAIN BOARD TO COMPUTER
Size Document Number
A
04 - FILE NAME: CBL_PC.SCH
REV
01
CONNECTOR TO PCSE I/O CARD IN COMPUTER
CONNECTOR TO MAIN BOARD

APPENDIX E

COST BREAKDOWN OF SPEED MONITORING SYSTEMS

1. *ANAFLEX SYSTEM*

Software	R30 000
Computer Hardware	R16 000
Sensors (20 off)	R8 000
Cabinet for ANAFLEX & PC + installation	R10 000
ANAFLEX	R76 000
Frequency conditioning modules (80 off)	R20 000
Power supply	R500
Wiring of sensors (including cable + conduit)	R18 000
CONTINGENCY	R17 850
TOTAL:	R196 350

2. SCADA-MULTIPLEXOR SYSTEM

Software	R30 000
Computer Hardware	R16 000
Sensors (20 off)	R8 000
Cabinet for PC & Front End Processor	R4 000
Enclosures for analogue input modules (10 off)	R7 000
Front End Processor	R2 000
Analogue input modules (10 off)	R6 000
RLC Digital Panel Meters (20 off)	R26 000
Frequency conditioning modules (60 off)	R24 000
Transformer + Power Supply	R1 000
Wiring of sensors to enclosures & installation	R15 000
CONTINGENCY	R13 900
TOTAL:	R152 900

3. RLC DIGITAL PANEL METER SYSTEM

Software	R30 000
Computer Hardware	R16 000
Sensors (20 off)	R8 000
Cabinet for PC	R4 000
Enclosures for panel meters (20 off)	R18 000
RLC Digital Panel Meters (80 off)	R87 000
Accessories for panel meters	R3 000
Wiring of sensors & installation of enclosures	R15 000
CONTINGENCY	R18 100
TOTAL:	R199 100

4. *STATUS DIGITAL PANEL METER SYSTEM*

Software	R30 000
Computer Hardware	R16 000
Sensors (20 off)	R8 000
Cabinet for PC	R4 000
Enclosures for panel meters (20 off)	R18 000
Status Panel Meters (80 off)	R113 600
Wiring of sensors & installation of enclosures	R15 000
CONTINGENCY	R20 460
TOTAL:	R225 060

5. *SYSTEM INSTALLED*

Cost breakdown of system used to provide a solution:

Software	R10 400
Computer Hardware	R15 300
Cabinet for PC	R4 000
Power Supplies (4 off)	R3 000
Analogue Multiplexer, Display and Control Boards	R8 700
Status Panel Meters (3 off)	R8 700
Installation and Wiring of cabinet	R4 100
CONTINGENCY	R5 110
TOTAL:	R56 010